Service schematics

Nokia Lumia 925

RM-892

17.06.2013

v1.0

IMPORTANT

This document is intended for use by authorized Nokia service centers only. Please use the document together with other documents such as the Service Manual and Service Bulletins.

Version information

While every effort has been made to ensure that the document is accurate, some errors may exist. Please always check for the latest published version for this document.

If you find any errors in the document please send email to: service.manuals@nokia.com

1.0 First approved version.

Contents

1 Front page
2 PM8921, Power, Wireless charging flex, Side key flex, Vibra flex, NFC, SIM
3 PM8921, MSM8960
4 MSM8960, Memory, Display, Touch, Cameras, Flash, Sensors
5 Audio, Microphones, AHJ, IHF, USB, Bottom flex, Connector flex
6 RF Transceiver, GPS, BT/WLAN/FM
7 RF Transceiver
8 Component finder top
9 Component finder bottom
10 Component finder flex boards
11 Component finder flex boards

Nokia Internal Use only | Copyright © 2013 Nokia, Only for training and service purposes

Nokia Care Academy

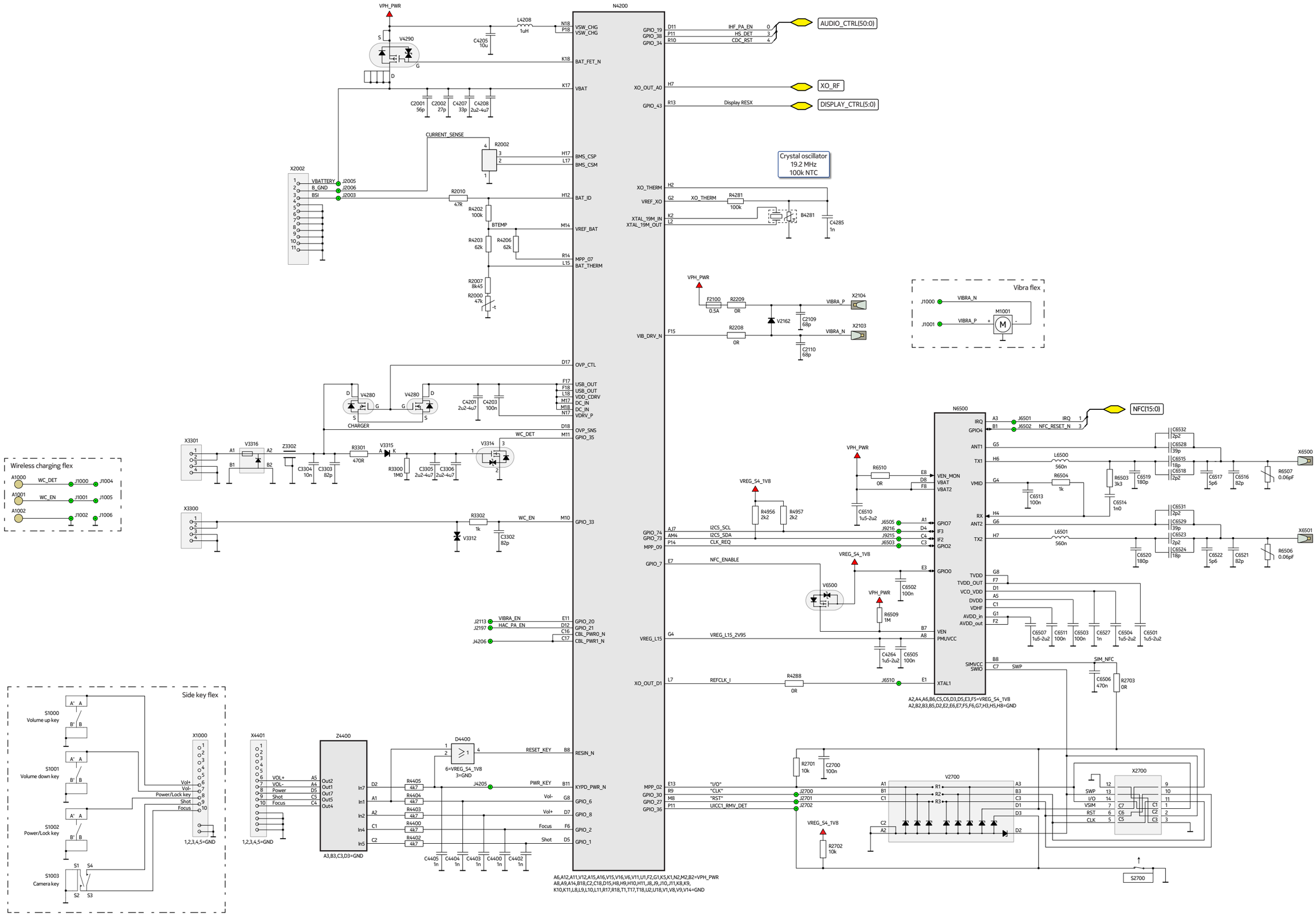

Nokia Internal Use only | Copyright © 2013 Nokia, Only for training and service purposes

Nokia Care Academy

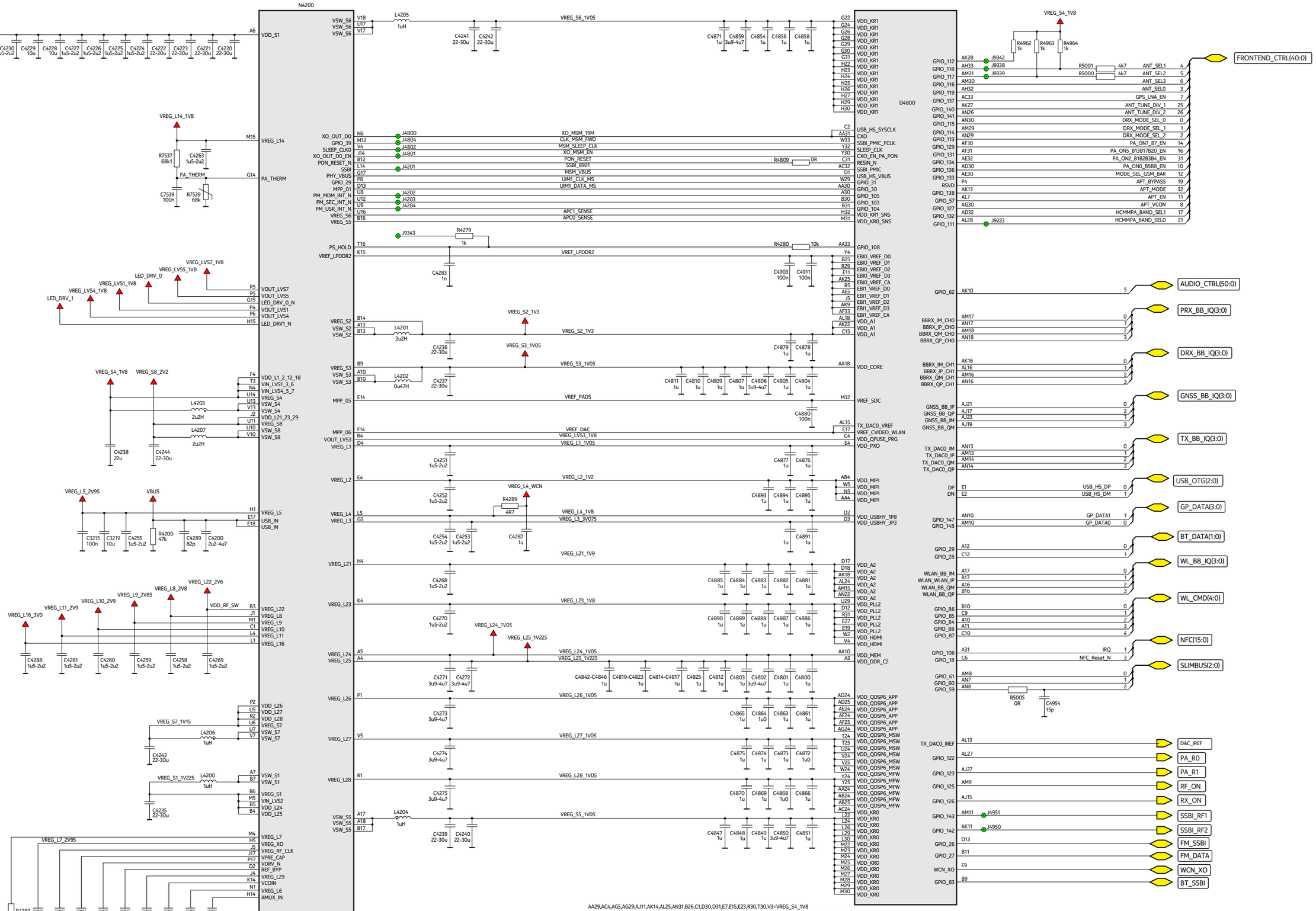

AA29,AC4,AG5,AG29,AJ11,AK14,AL25,AN31,B26,C1,D30,D31,E7,E15,E23,R30,T30,V3=VREG_S4_1V8
A3,A7,A26,AC2,AC30,AE33,AG4,AK20,AK24,AK33,AL9,AL19,AM27,AN3,AN4,AN9,AN11,B3,B13,B19,C25,D9,D19,E32,F30,G3,H4,N31,R4,R33,T3,W3,V33=VREG_L25_1V225
AA10,AA14,AA26,AB19,AB27,AC20,AD9,AD13,AE6,AE10,AE14,AE26,AF7,AF27,AG8,D6,D20,D27,E13,G8,G18,H9,H19,J10,J14,K15,L5,L18,M9,M19,N10,N30,R20,T9,T17,T21,U10,U14,U18,U22,U26,U30,V15,V23,V27,Y9,Y13=VREG_L24_1V05
AA22,AB7,AB11,AB15,AB23,AC8,AC12,AC16,AC29,AD17,AD21,AE18,AE22,AE29,AF11,AF15,AF23,AG12,AG16,AH9,AH30,AJ9,D10,D15,E25,F3,F6,F7,F11,G5,G12,G16,G20,H13,H17,H21,J6,K7,K11,L8,L12,L16,L20,M13,M17,M21,N6,N14,N18,N22,P7,P11,P15,P19,P23,P27,R8,R12,R16,R24,R32,T13,U6,W12,W16,W20,V7,V11,V19,W8,Y17,Y21=vREG_S3_1V05
A1,A18,A19,A2,A25,A32,A33,A4,A9,A12,AA16,AA20,AA28,AA6,AA8,AB13,AB17,AB21,AB9,AC1,AC10,AC14,AC18,AC22,AC26,AC28,AC6,AD11,AD15,AD19,AD23,AD27,AD33,AD37,AE12,AE16,AE20,AE28,AE8,AF13,AF17,AF19,AF21,AF9,AG1,AG10,AG11,AG14,AG18,AG2,AG20,AG22,AG26,AG28,AG3,AG33,AG6,AG9,AH11,AH13,AH15,AH17,AH19,AH21,
AH23,AH25,AH27,AH4,AH7,AK17,AK19,AK21,AK23,AK8,AL21,AL22,AM1,AM12,AM19,AM2,AM20,AM21,AM22,AM25,AM32,AM33,AN1,AN15,AN19,AN2,AN20,AN21,AN25,AN27,AN32,AN33,B1,B14,B15,B18,B2,B24,B32,B33,B4,C16,C19,C3,D11,D16,D28,D29,D4,D7,E30,F13,F15,F17,F19,F21,F23,F25,F27,F32,F9,G1,G10,G14,G2,G6,H11,H15,H7,J12,J16,J18,J20,
J22,J24,J26,J28,J29,J3,J30,J31,J32,J33,J4,J8,K13,K17,K19,K21,K22,K23,K24,K25,K26,K27,K28,K29,K30,K31,K32,K33,K9,L10,L14,L6,M11,M15,M7,N1,N12,N16,N2,N20,N24,N26,N8,P13,P17,P21,P25,P30,P33,P9,R10,R14,R18,R22,R26,R28,R6,T11,T15,T19,T23,T27,T7,U12,U16,U20,U28,U5,U8,W1,W10,V13,W14,V17,W18,V21,W22,W26,W28,W4,W6,V9,Y11,Y15,
Y19,Y23,Y27,Y7=GND

Nokia Internal Use only | Copyright © 2013 Nokia, Only for training and service purposes

Nokia Care Academy

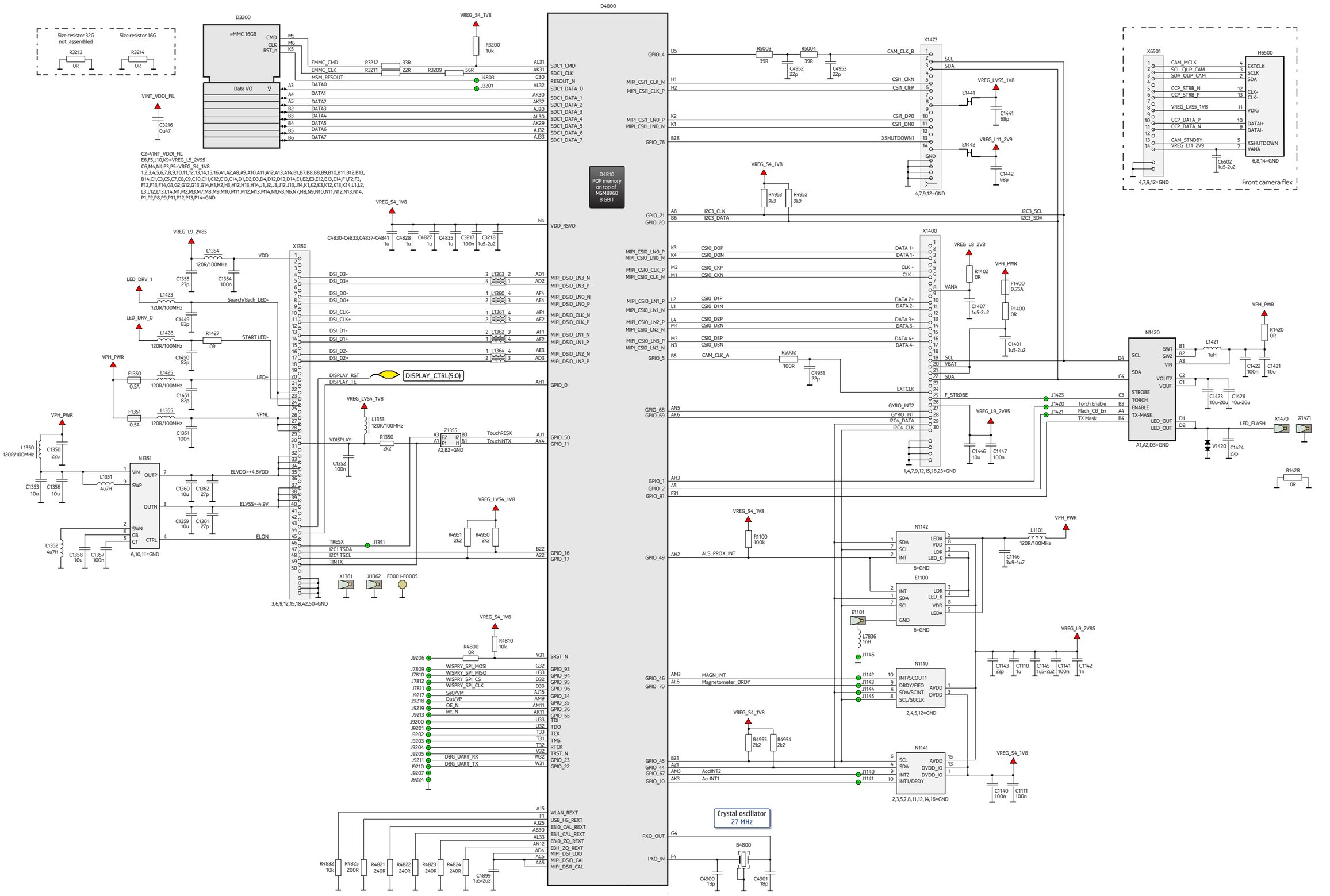

Nokia Internal Use only | Copyright © 2013 Nokia, Only for training and service purposes

Nokia Care Academy

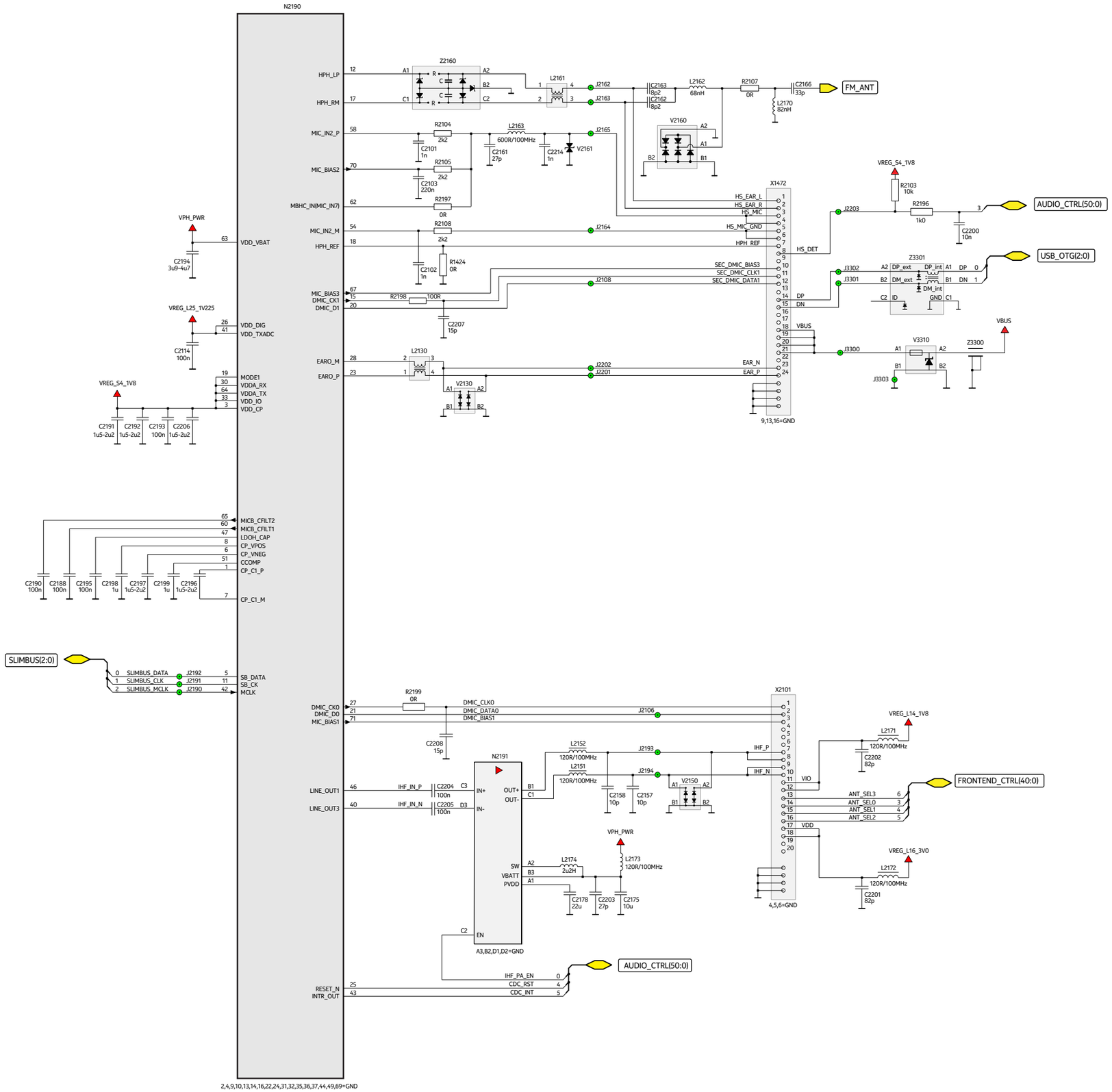

Connector flex

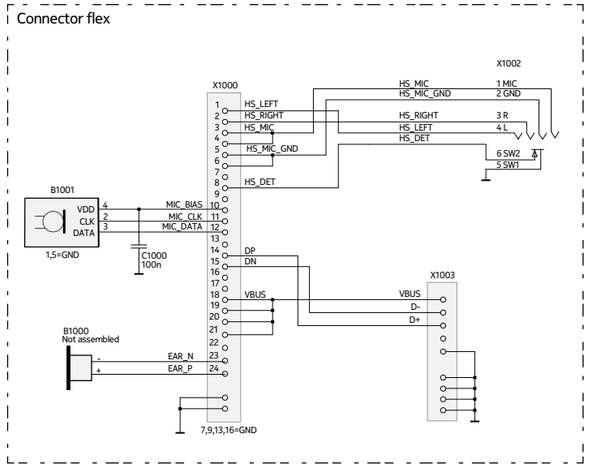

Bottom flex

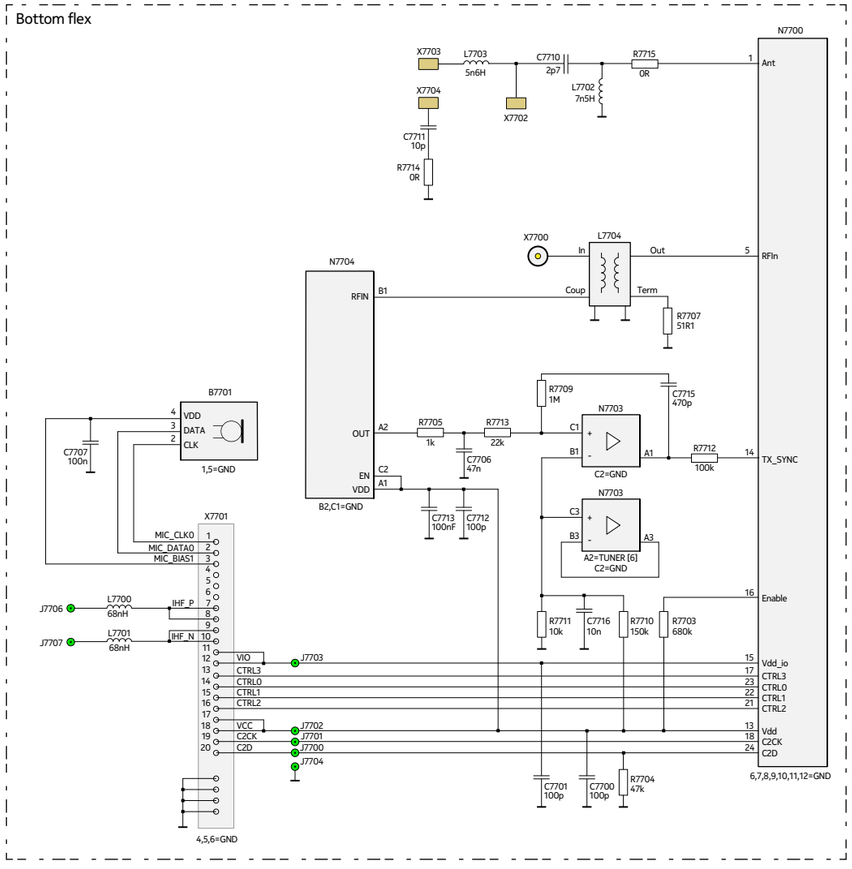

Nokia Internal Use only | Copyright © 2013 Nokia, Only for training and service purposes

Nokia Care Academy

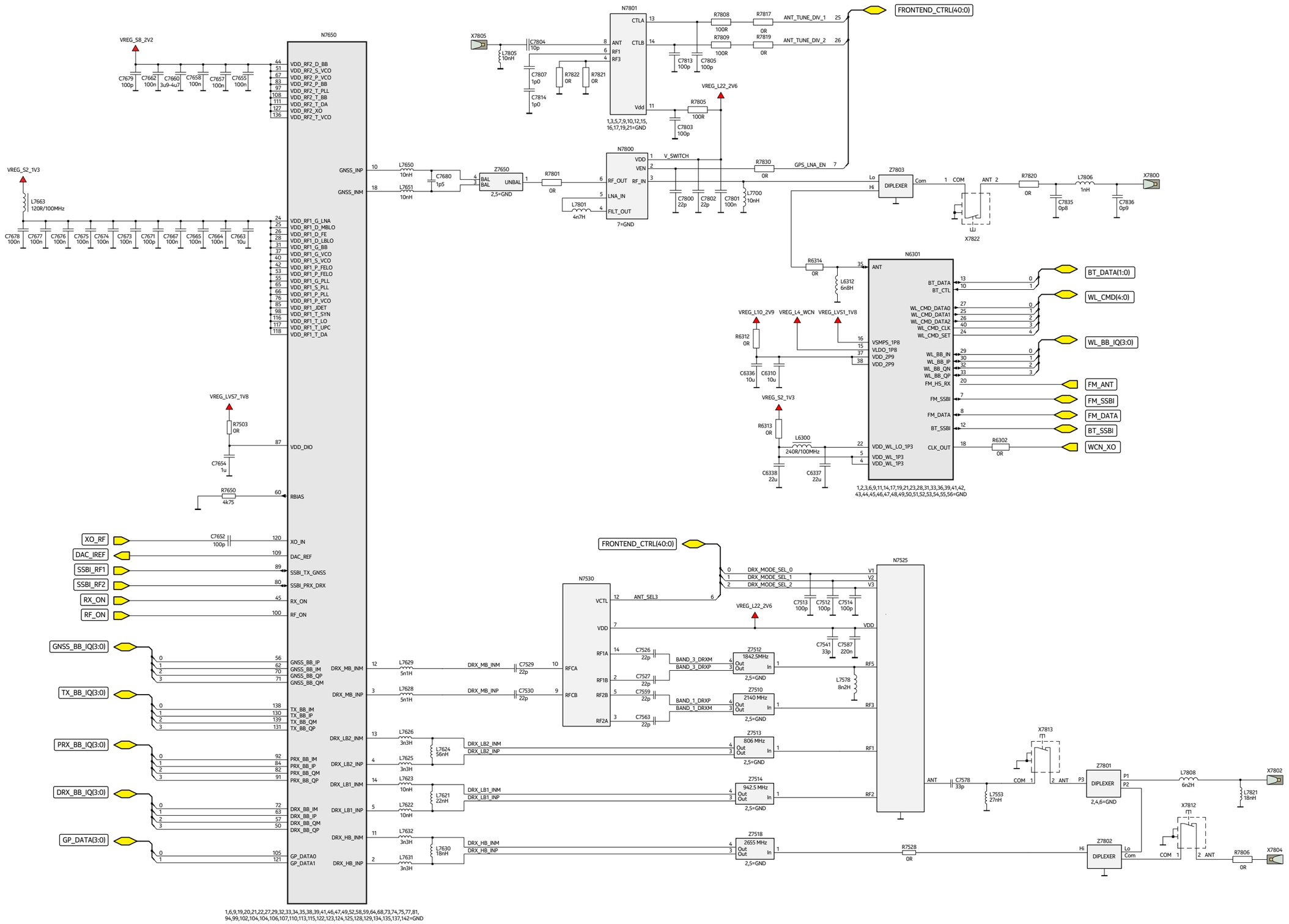

Nokia Internal Use only | Copyright © 2013 Nokia, Only for training and service purposes

Nokia Care Academy

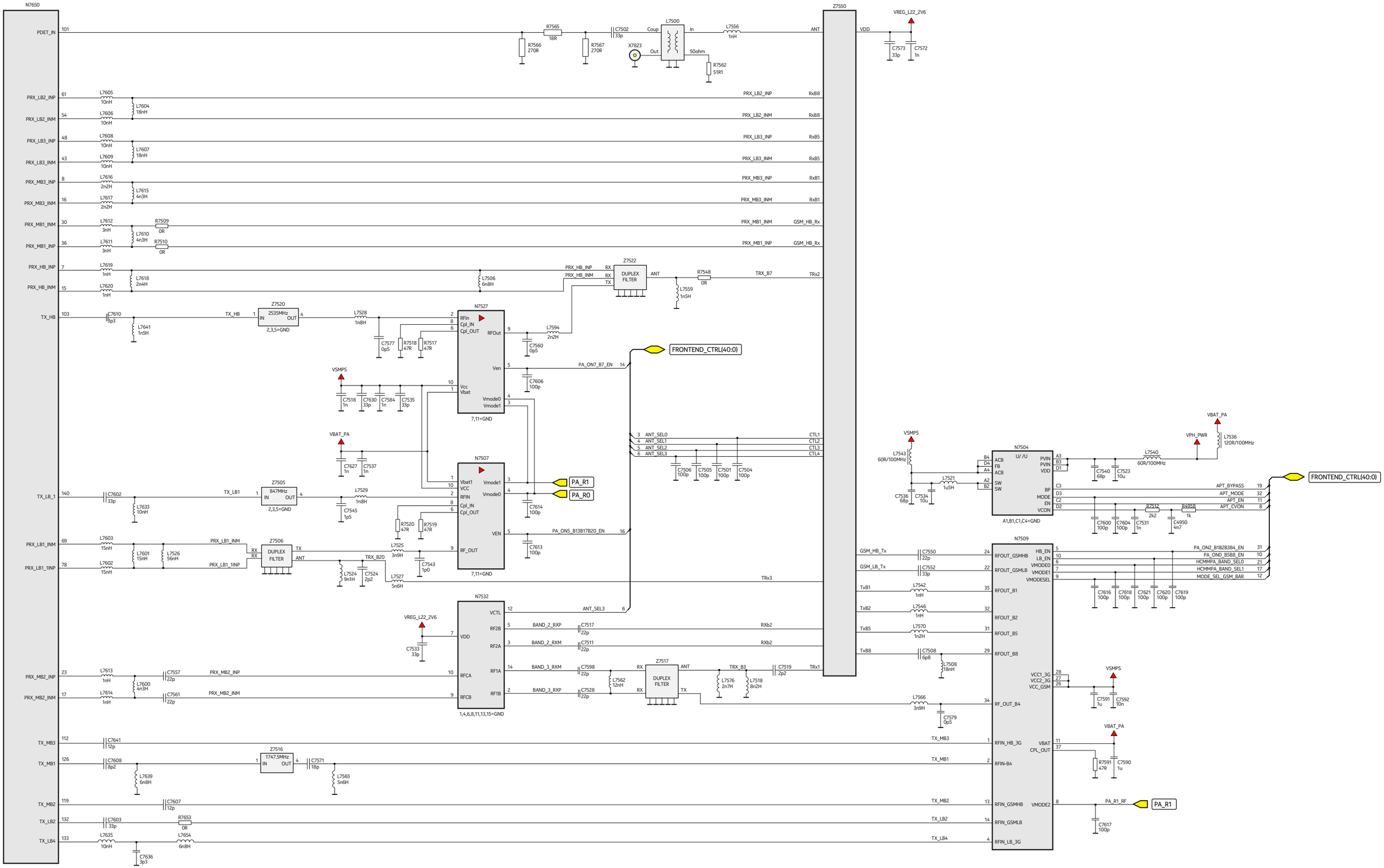

Nokia Internal Use only | Copyright © 2013 Nokia, Only for training and service purposes

Nokia Care Academy

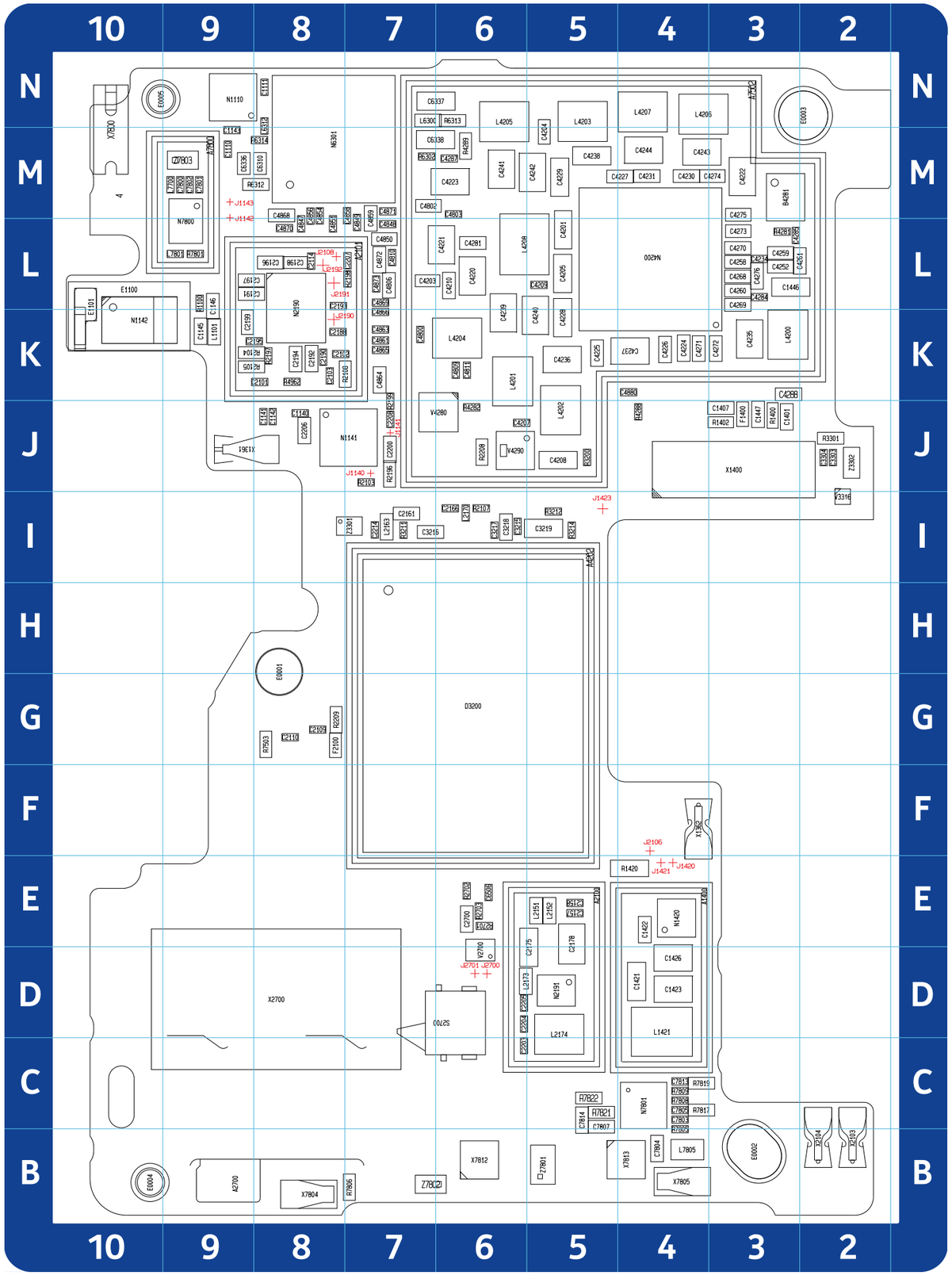

B		C2198	L8	C4236	K5	C4854	M8	F		R1402	J3	S		J1421	E4
B4281	M3	C2199	K9	C4237	K4	C4856	M8	F1400	J3	R1420	E4	S2700	D6	J1423	I5
C		C2200	J7	C4238	M5	C4858	M7	F2100	G8	R2103	J7	V		J2106	F4
C1110	M9	C2203	C6	C4239	K6	C4859	M7	L		R2104	K9	V2700	D6	J2108	L8
C1111	N8	C2204	D6	C4240	K5	C4861	K7	L1101	K9	R2105	K9	V3316	I2	J2190	K8
C1140	J8	C2205	D6	C4241	M6	C4863	K7	L1421	D4	R2107	I6	V4280	J6	J2191	L8
C1141	J8	C2206	J8	C4242	M5	C4864	K7	L2151	E5	R2108	K7	V4290	J6	J2192	L8
C1142	J8	C2207	L7	C4243	M4	C4865	K7	L2152	E5	R2196	J7	X		J2700	D6
C1143	M9	C2208	J7	C4244	M4	C4866	K7	L2163	I7	R2197	K8	X1361	J9	J2701	D6
C1145	K9	C2214	I7	C4252	L3	C4868	M8	L2170	I6	R2198	L7	X1362	F4		
C1146	L9	C2700	E6	C4258	L3	C4869	L7	L2173	D6	R2199	J7	X1400	J3		
C1401	J3	C3215	I6	C4259	L3	C4870	L8	L2174	D5	R2208	J6	X2103	B2		
C1407	J3	C3216	I7	C4260	L3	C4871	M7	L4200	K3	R2209	G8	X2104	B2		
C1421	D4	C3217	I6	C4261	L3	C4872	L7	L4201	K6	R2701	E6	X2700	D8		
C1422	E4	C3218	I6	C4268	L3	C4873	L7	L4202	J5	R2702	E6	X7800	M10		
C1423	D4	C3219	I5	C4269	L3	C4880	K4	L4203	N5	R2703	E6	X7804	B8		
C1426	D4	C3303	J2	C4270	L3	C6310	M8	L4204	K6	R3200	J5	X7805	B4		
C1446	L3	C3304	J2	C4271	K4	C6336	M9	L4205	N6	R3211	I7	X7812	B6		
C1447	J3	C4201	L5	C4272	K3	C6337	N6	L4206	N4	R3212	I5	X7813	B4		
C2101	K8	C4203	L7	C4273	L3	C6338	M7	L4207	N4	R3214	I5	Z			
C2102	K8	C4204	M5	C4274	M3	C6506	E6	L4208	L6	R3301	J2	Z3301	I7		
C2103	K8	C4205	L5	C4275	M3	C7800	M9	L6300	N7	R4281	L3	Z3302	J2		
C2109	G8	C4207	J6	C4276	L3	C7801	M9	L6312	N8	R4282	J6	Z4200	K3		
C2110	G8	C4208	J5	C4281	L6	C7802	M9	L7700	M9	R4288	J4	Z4201	K5		
C2114	L8	C4209	L5	C4284	L3	C7803	C4	L7801	L9	R4289	M6	Z4202	K4		
C2157	E5	C4210	L6	C4285	L3	C7804	B4	L7805	B4	R4962	K8	Z4203	M5		
C2158	E5	C4220	L6	C4287	M6	C7805	C4	N		R6302	M7	Z4204	K5		
C2161	I7	C4221	L6	C4288	K3	C7807	C5	N1110	N9	R6312	M8	Z4205	M5		
C2166	I6	C4222	M3	C4800	K7	C7813	C4	N1141	J7	R6313	N6	Z4206	M4		
C2175	D5	C4223	M6	C4802	M7	C7814	C5	N1142	K10	R6314	M8	Z4207	M4		
C2178	E5	C4224	K4	C4803	M6	D		N1420	E4	R7503	G8	Z4280	M3		
C2188	K8	C4225	K5	C4806	L7	D3200	G6	N2190	L8	R7801	L9	Z7801	B5		
C2190	K8	C4226	K4	C4809	K6	E		N2191	D5	R7805	B4	Z7802	B7		
C2191	L9	C4227	M4	C4810	L7	E0001	H8	N4200	L4	R7806	B7	Z7803	M9		
C2192	K8	C4228	K5	C4811	K6	E0002	B3	N6301	M8	R7808	C4	TST points			
C2193	L8	C4229	M5	C4847	L8	E0003	N2	N7800	L9	R7809	C4	J1140	J7		
C2194	K8	C4230	M4	C4848	L7	E0004	B10	N7801	C4	R7817	C4	J1141	J7		
C2195	K8	C4231	M4	C4849	L7	E0005	N10	R		R7819	C4	J1142	M9		
C2196	L8	C4234	L3	C4850	L7	E1100	K10	R1100	L9	R7821	C5	J1143	M9		
C2197	L9	C4235	K3	C4851	L8	E1101	L10	R1400	J3	R7822	C5	J1420	E4		

Nokia Internal Use only | Copyright © 2013 Nokia, Only for training and service purposes

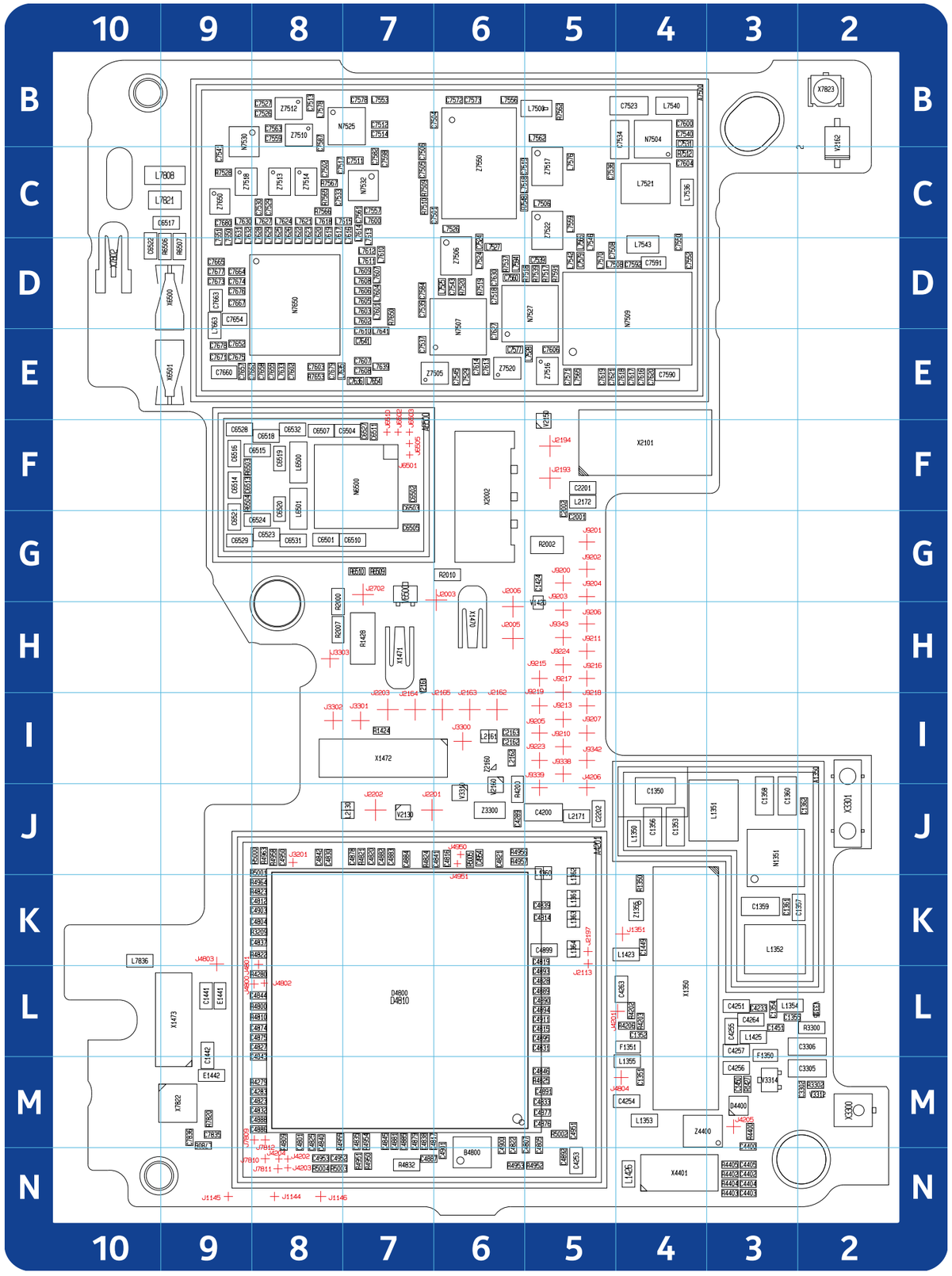

B		C4816	J6	C4954	J6	C7545	E6	C7675	E9	L7546	D5	L7836	K10	R5000	J8	X6501	E9	J4802	L8
B4800	N6	C4817	M7	C6501	G8	C7550	D4	C7676	D9	L7553	B7	N		R5001	J8	X7802	D10	J4803	K9
C		C4819	K5	C6502	F7	C7552	D4	C7677	D9	L7556	B6	N1351	J3	R5002	M5	X7822	M9	J4804	M4
C1350	J4	C4820	J7	C6503	F7	C7557	C7	C7678	E9	L7559	C5	N6500	F7	R5003	N8	X7823	B2	J4950	J6
C1351	M4	C4821	J6	C6504	F7	C7559	B8	C7679	E8	L7562	B5	N7504	B4	R5004	N8	Z		J4951	J6
C1352	L4	C4822	M6	C6505	G7	C7560	D6	C7680	C9	L7565	E5	N7507	D6	R5005	J6	Z1355	K4	J6501	F7
C1353	J4	C4823	M8	C6507	F8	C7561	C7	C7835	M9	L7566	D5	N7509	D4	R6503	F9	Z2160	I6	J6502	F7
C1354	L3	C4825	M8	C6510	G7	C7563	B8	C7836	M9	L7570	D5	N7525	B7	R6504	F9	Z3300	J6	J6503	F7
C1355	L3	C4827	L8	C6511	F7	C7571	E5	D		L7576	C5	N7527	D5	R6506	D9	Z4400	M4	J6505	F7
C1356	J4	C4828	L5	C6513	F9	C7572	B6	D4400	M3	L7578	B8	N7530	B9	R6507	D9	Z7505	E6	J6510	F7
C1357	K2	C4830	J8	C6514	F9	C7573	B6	D4800	L7	L7594	D6	N7532	C7	R6509	G7	Z7506	D6	J7809	M8
C1358	J3	C4831	L5	C6515	F8	C7577	E6	D4810	L7	L7600	C7	N7650	D8	R6510	G7	Z7510	B8	J7810	N8
C1359	K3	C4832	M8	C6516	F9	C7578	B7	E		L7601	D7	R		R7509	C7	Z7512	B8	J7811	N8
C1360	J3	C4833	M5	C6517	C9	C7579	D5	E1441	L9	L7602	D7	R1350	K4	R7510	C7	Z7513	C8	J7812	M8
C1361	K3	C4835	M7	C6518	F8	C7582	C7	E1442	M9	L7603	D7	R1424	I7	R7512	C4	Z7514	C8	J9200	G5
C1362	J2	C4837	K8	C6519	F8	C7584	D7	F		L7604	D7	R1427	M3	R7517	D5	Z7516	E5	J9201	G5
C1424	G5	C4838	M7	C6520	F8	C7587	B8	F1350	L3	L7605	D7	R1428	H7	R7518	D5	Z7517	C5	J9202	G5
C1441	L9	C4839	K5	C6521	G9	C7590	E4	F1351	L4	L7606	D7	R2000	H8	R7519	D6	Z7518	C9	J9203	H5
C1442	L9	C4840	M8	C6522	D10	C7591	D4	L		L7607	D7	R2002	G5	R7520	D6	Z7520	E6	J9204	G5
C1449	K4	C4841	J6	C6523	G8	C7592	D4	L1350	J4	L7608	D7	R2007	H8	R7528	C9	Z7522	C5	J9205	I5
C1450	M3	C4842	J8	C6524	G8	C7598	C7	L1351	J3	L7609	D7	R2010	G6	R7537	D6	Z7550	C6	J9206	H5
C1451	L3	C4843	M8	C6527	F7	C7600	B4	L1352	K3	L7610	D7	R3209	K8	R7539	D5	Z7650	C9	J9207	I5
C2001	G5	C4844	L8	C6528	F9	C7602	E8	L1353	M4	L7611	D7	R3300	L2	R7548	C6	TST points		J9210	I5
C2002	F5	C4845	M7	C6529	G9	C7603	E8	L1354	L3	L7612	D7	R3302	M2	R7562	B5	J1144	N8	J9211	H5
C2162	I6	C4846	M5	C6531	G8	C7604	C4	L1355	M4	L7613	C7	R4200	J6	R7565	C8	J1145	N9	J9213	I5
C2163	I6	C4874	L8	C6532	F8	C7606	E5	L1360	J5	L7614	C7	R4202	L4	R7566	C8	J1146	N8	J9215	H5
C2201	F5	C4875	L8	C7501	C6	C7607	E7	L1361	K5	L7615	C7	R4203	L4	R7567	C8	J1351	K4	J9216	H5
C2202	J5	C4876	M5	C7502	C8	C7608	E7	L1362	K5	L7616	C7	R4206	L4	R7591	D5	J2003	G6	J9217	H5
C3302	M2	C4877	M5	C7504	B6	C7610	E7	L1363	K5	L7617	C8	R4279	M8	R7650	D7	J2005	H6	J9218	I5
C3305	M2	C4878	J7	C7505	C7	C7613	E6	L1364	K5	L7618	C8	R4280	L8	R7653	E8	J2006	H6	J9219	I5
C3306	L2	C4879	M7	C7506	C7	C7614	E6	L1423	K4	L7619	C8	R4400	M3	R7820	M9	J2113	K5	J9223	I5
C4200	J5	C4881	M7	C7508	D5	C7616	E4	L1425	L3	L7620	C8	R4402	N3	V		J2162	I6	J9224	H5
C4233	L3	C4882	J7	C7511	C7	C7617	E4	L1426	N4	L7621	C8	R4403	N3	V1420	H5	J2163	I6	J9338	I5
C4251	L3	C4883	J7	C7512	B7	C7618	E4	L2130	J7	L7622	C8	R4404	N3	V2130	J7	J2164	I7	J9339	J5
C4253	N5	C4884	J7	C7513	B8	C7619	E5	L2161	I6	L7623	C8	R4405	N3	V2150	F5	J2165	I6	J9342	I5
C4254	M4	C4885	M7	C7514	B7	C7620	E4	L2162	I6	L7624	C8	R4800	L8	V2160	J6	J2193	F5	J9343	H5
C4255	L3	C4886	M8	C7517	C8	C7621	E5	L2171	J5	L7625	C8	R4809	M8	V2161	H7	J2194	F5		
C4256	M3	C4887	N7	C7518	D6	C7627	E6	L2172	F5	L7626	C8	R4810	L8	V2162	B2	J2197	K5		
C4257	L3	C4888	M8	C7519	C6	C7630	D6	L6500	F8	L7627	C8	R4821	J7	V3310	J6	J2201	J7		
C4263	L4	C4889	L5	C7523	B4	C7636	E7	L6501	F8	L7628	C8	R4822	K8	V3312	M2	J2202	J7		
C4264	L3	C4890	L5	C7524	D6	C7641	E7	L7500	B5	L7629	C8	R4823	K8	V3314	M3	J2203	I7		
C4283	M8	C4891	M5	C7526	B8	C7652	E9	L7506	C5	L7630	C9	R4824	J7	V3315	L2	J2702	G7		
C4289	J6	C4892	N5	C7527	B8	C7654	D9	L7508	D5	L7631	C9	R4825	M5	V6500	G7	J3201	J8		
C4400	M3	C4893	L5	C7529	C8	C7655	E8	L7518	C6	L7632	C9	R4832	N7	X		J3300	I6		
C4402	N3	C4894	L5	C7530	C8	C7657	E9	L7521	C4	L7633	E8	R4950	N7	X1350	L4	J3301	I7		
C4403	N3	C4895	L5	C7531	B4	C7658	E8	L7524	D6	L7635	E8	R4951	N7	X1470	H6	J3302	I8		
C4404	N3	C4899	K5	C7533	C8	C7660	E9	L7525	D6	L7639	E7	R4952	N5	X1471	H7	J3303	H8		
C4405	N3	C4900	M6	C7534	B4	C7662	E9	L7526	C6	L7641	E7	R4953	N6	X1472	I7	J4201	L4		
C4801	M8	C4901	N6	C7535	D7	C7663	D9	L7527	D6	L7650	C9	R4954	M7	X1473	L9	J4202	N8		
C4804	K8	C4903	K8	C7536	C5	C7664	D9	L7528	E5	L7651	C9	R4955	M8	X2002	F6	J4203	N8		
C4805	M5	C4911	L5	C7537	E7	C7665	D9	L7529	E6	L7654	E7	R4956	J6	X2101	F4	J4204	N8		
C4807	M5	C4950	J8	C7539	D5	C7667	D9	L7536	C4	L7663	D9	R4957	J6	X3300	M2	J4205	M3		
C4812	K8	C4951	M5	C7540	B4	C7671	E9	L7540	B4	L7806	M9	R4958	J8	X3301	J2	J4206	J5		
C4814	K5	C4952	N8	C7541	C9	C7673	D9	L7542	D5	L7808	C9	R4963	J8	X4401	N4	J4800	L8		
C4815	L5	C4953	N8	C7543	D6	C7674	D9	L7543	D4	L7821	C9	R4964	K8	X6500	D9	J4801	K8		

Nokia Internal Use only | Copyright © 2013 Nokia, Only for training and service purposes

Nokia Care Academy

Bottom flex (4BJ_05r)

TOP

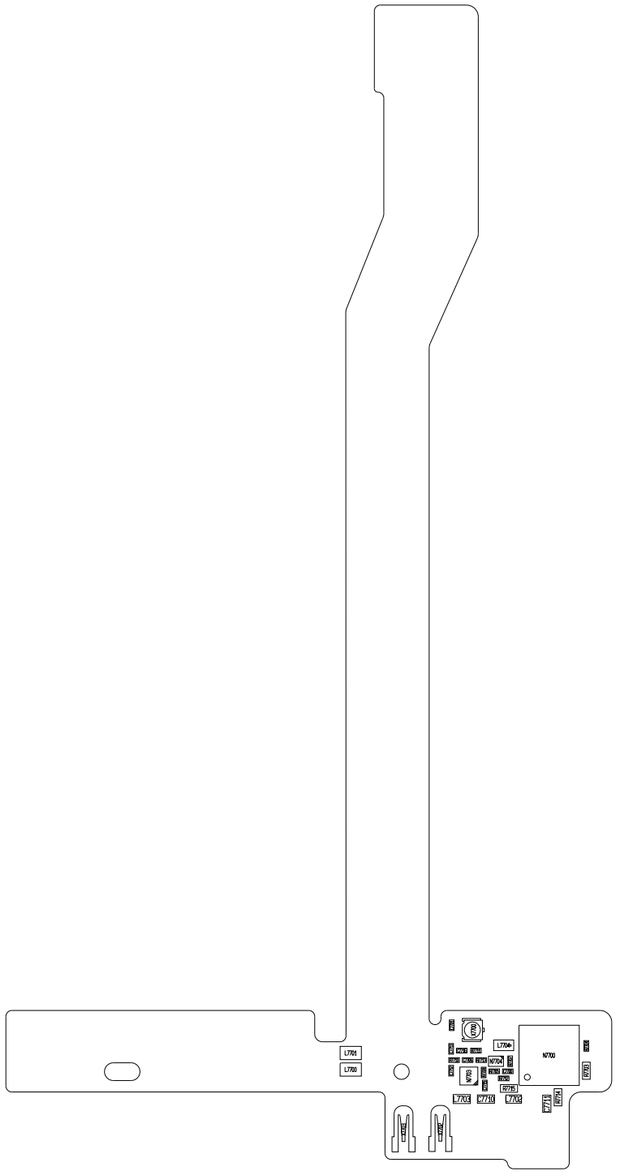

BOTTOM

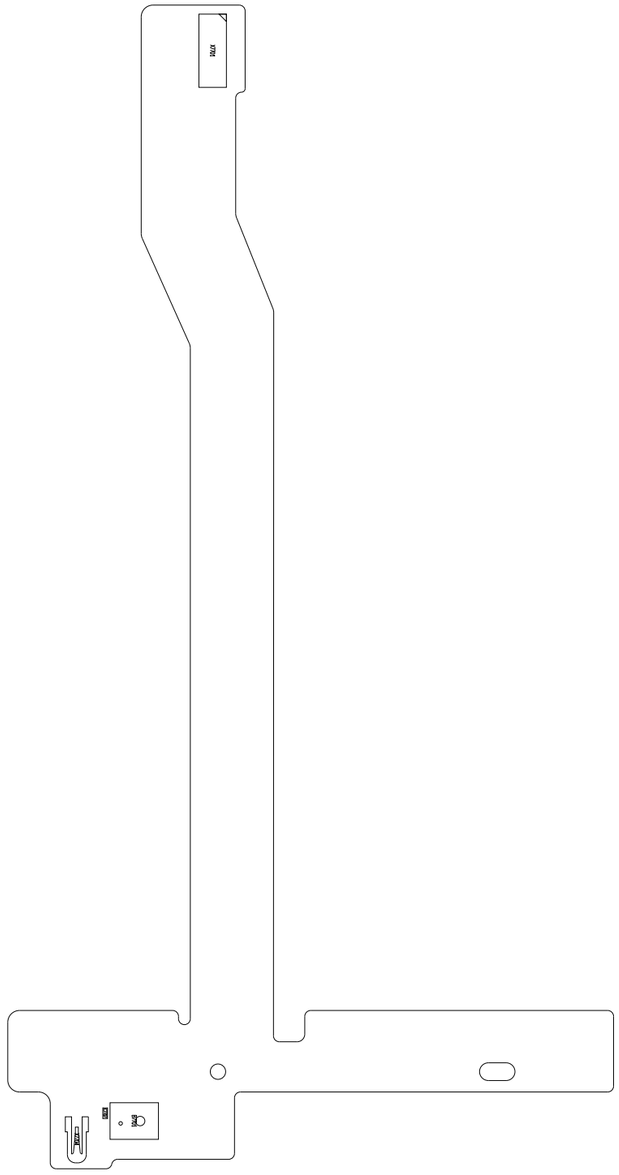

Side key flex (4BL_07a)

TOP

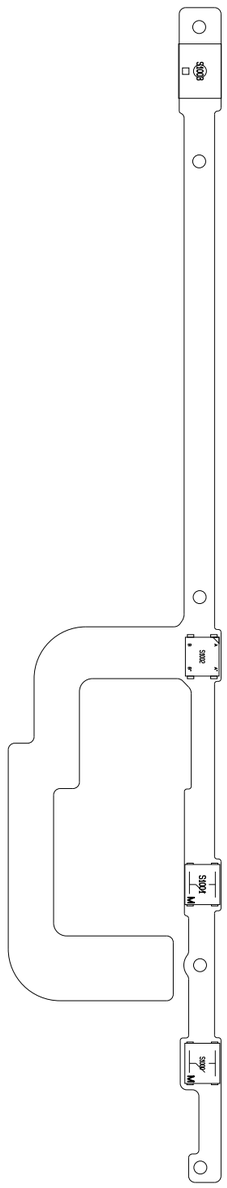

BOTTOM

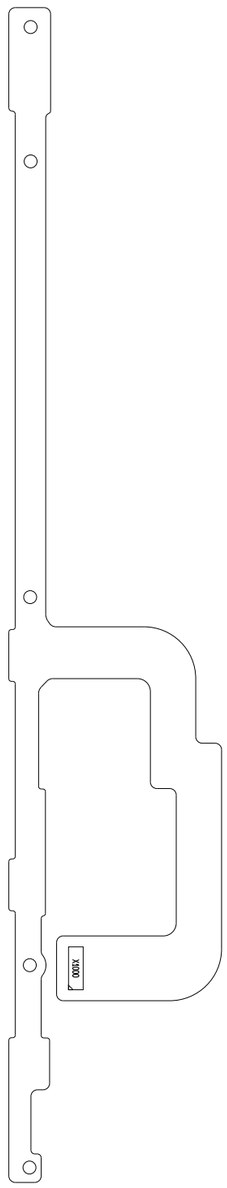

Nokia Internal Use only | Copyright © 2013 Nokia, Only for training and service purposes

Front camera flex (4BH_04a)

TOP

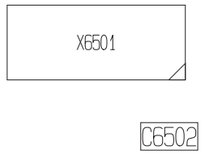

BOTTOM

Vibra flex (4BK_05a)

TOP

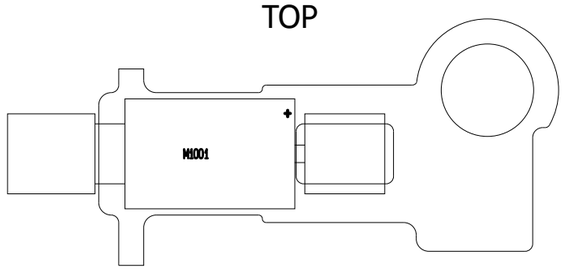

Connector flex (4BG_05a)

TOP

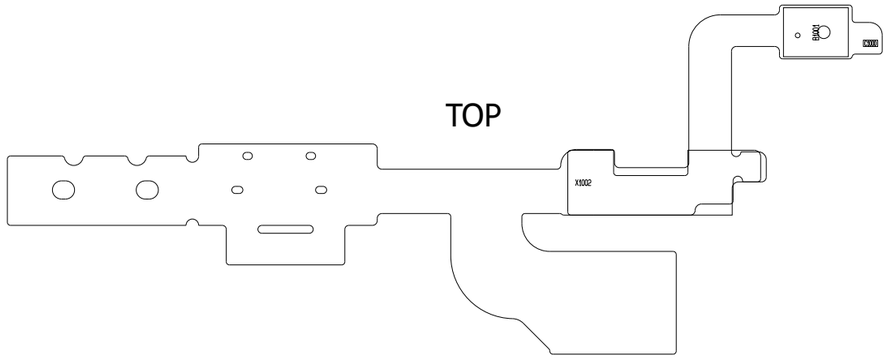

BOTTOM

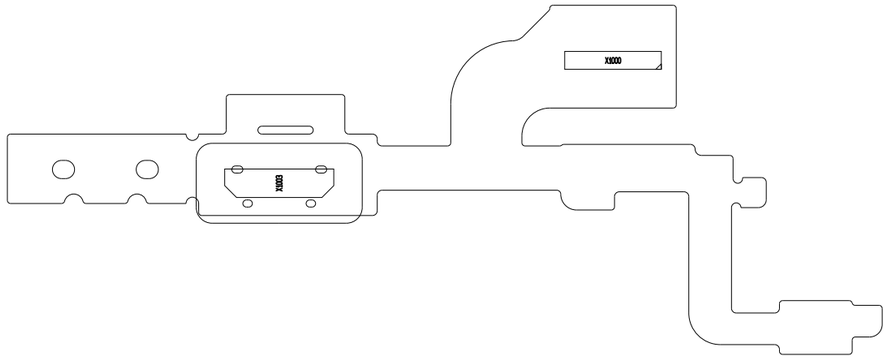

Wireless charging flex (4CU_03a)

TOP

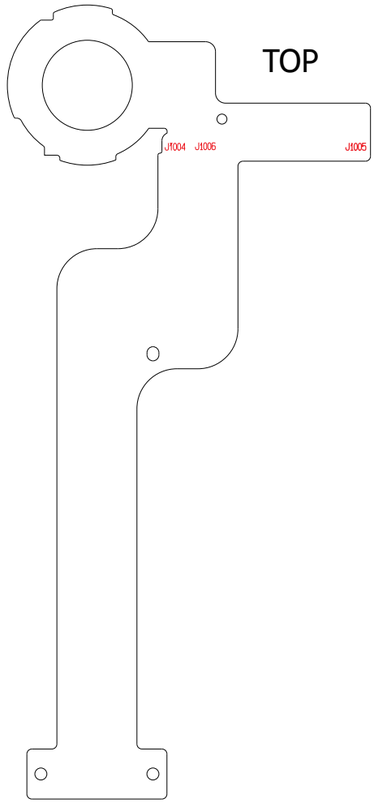

BOTTOM

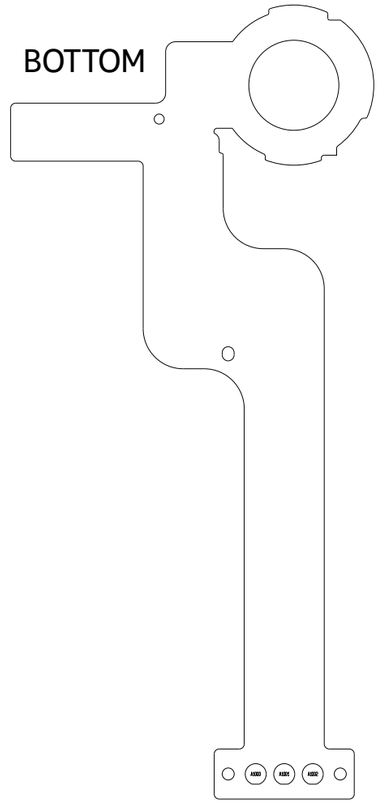

Nokia Internal Use only | Copyright © 2013 Nokia, Only for training and service purposes