GIGABYTE GA-8IG1000MK Schematics

Revision 1.01

SHEET	TITLE
01	COVER SHEET
02	BOM & PCB MODIFY HISTORY
03	BLOCK DIAGRAM
04	P4_478A
05	P4_478B
06	P4_478C
07	SPRINGDALE HOST
08	SPRINGDALE DDR
09	SPRINGDALE AGP, HUB, CSA, VGA
10	SPRINGDALE PWR
11	DDR1,2 CHANNEL A
12	DDR3,4 CHANNEL B
13	DDR TERMINATION
14	AGP 8X
15	ICH5 PCI, USB, HUB, LAN
16	ICH5 IDE, GPIO, SATA, CTRL
17	ICH5 VCC, GND
18	FWH
19	CLOCK GEN
20	PCI1_2
21	PCI3
22	CODEC

SHEET	TITLE
23	AUDIO JACK, L_OUT, F_AUDIO
24	ITE 8712
25	COM_LPT
26	IDE
27	FAN/HWMO
28	KB_PS2
29	FPANEL
30	USB CONN
31	DDR POWER
32	VCORE POWER
33	ATX, OTHERS POWER
34	KINNERETH-R LNA(CSA-1)
35	KINNERETH-R LNA(CSA-2)
36	KINNERETH-R LNA(CSA-3)
37	

www.kythuatvitinh.com

Diễn Đàn
KyThuatViTinh.Com

Digitally signed by fdsf
DN: cn=fdsf, o=fsdfsd, ou=ffsdf, email=fdfsd@fsdff, c=US
Date: 2009.12.15 20:43:41 +07'00'

COMPONENT SIDE (1 oz. Copper)
VCC SIDE (1 oz. Copper)
GND SIDE (1 oz. Copper)
SOLDER SIDE (1 oz. Copper)

GIGABYTE CORP.

Title	COVER SHEET	
Size Custom	Document Number GA-8IG1000MK	Rev 1.01
Date: 星期四, 六月 12, 2003	Sheet 1 of 36	

Model Name: GA-8IG1000MK
Version : 1.01
243.84mm*243.84mm/C/60/+-15%/blue

Component history

Date	Change Item	Reason
	1.0 --> 10B	
3/20	add RN105,RN106,RN107	for power supply issue
3/21	add C211	for N/W CPU issue
	add LFB1 200/6/S	for EMI issue
	del Q189,Q190,R1124,C911,R1121,BC539	for Reset issue
	del R1125	for DDR25V issue
3/25	CR16 change to 0 ohm	for CODEC issue
3/26	CBC57 change to 1U/6/Y/10V	for front mic issue
3/27	DVT --> PVT	
3/28	10B ECN	
	刪除台路,統盟 PCB	DVT 未上線驗證
4/3	10B ECN	
	包材變更STAT CABLE 由一條改為兩條	
4/3	10B ECN	
	driver CD change to Rev:1.1	
4/15	8IG1000MK-GB-10B	
	Add SPDIF_IO,S_IRQ connector	for -GB BOM
	Del 包材 (BIOS label 除外)	
4/22	10C DVT BOM	
	U10 change to 49LF003A	for WHQL
4/25	10C --> 10C PBOM	
	add CBC6 0.01U/4/X/50V, CBC5 0/6	for CODEC issue
	CEC1 change to 22U/D/16/57	for CODEC issue
	Q130,Q132,Q134 add 6670AL second source	add second source
	Q131,Q133,Q135 add 6670AL second source	add second source
4/25	-GB-10B --> -GB-10C	同上
6/12	**BC490,BC492,C264,C265 Y5V change to X7R**	**Follow Hardware rule**
	L9,L10,L11 2.3UH/D/V/30A/3P change to	**Solve Choke noise**
	2.3UH/17材,含浸	

Circuit or PCB layout history

Date	Change Item	Reason
	1.0 --> 1.01	
3/20	add RN105,RN106,RN107,RN108,RN109	for power supply issue
	del Q189,R1121,BC539	for Reset issue
3/25	JD0, JD2 net swap	for CODEC issue

www.kythuatvitinh.com

BLOCK DIAGRAM

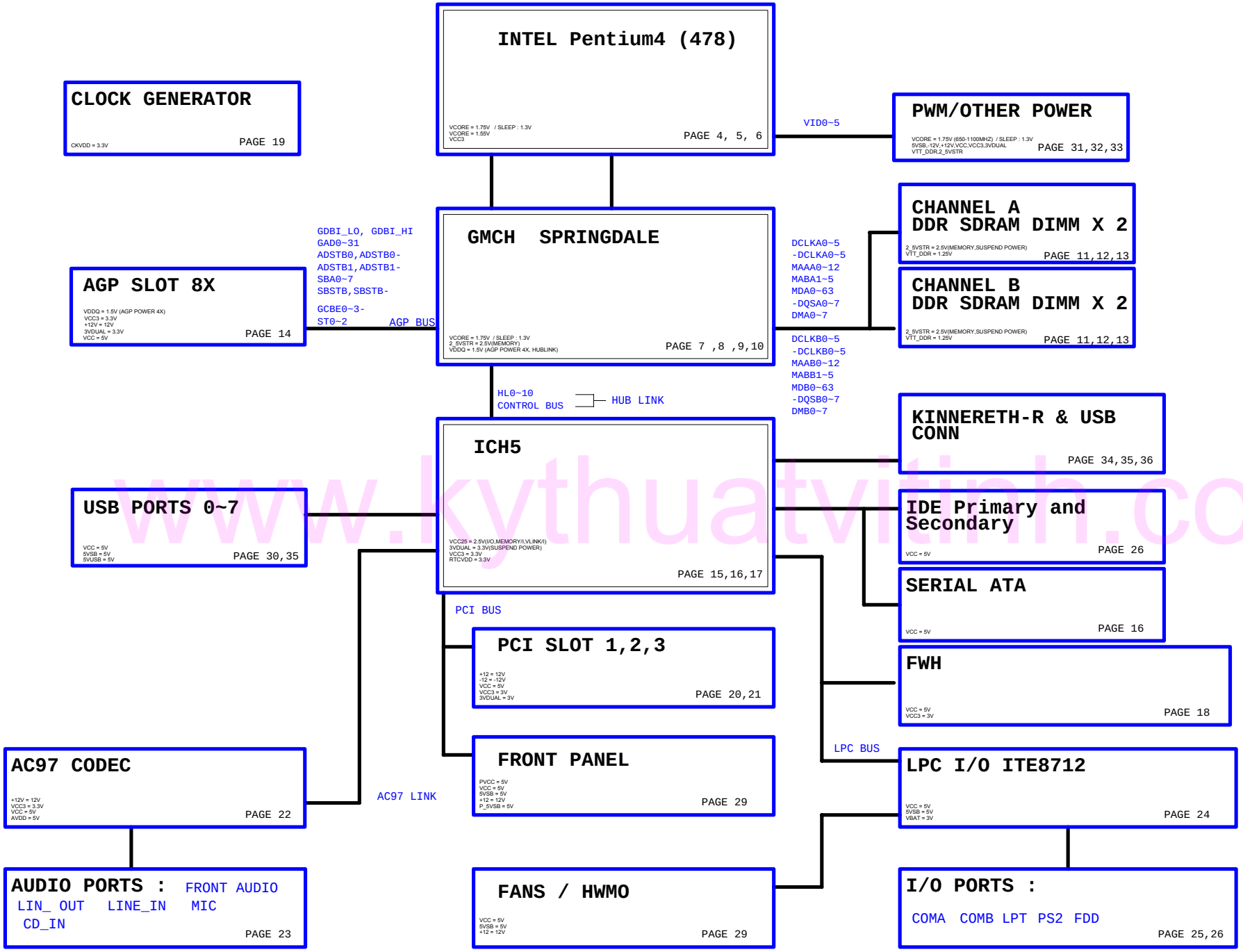

www.kythuatvitinh.com

GIGABYTE CORP.	
Title	BOM & PCB MODIFY HISTORY
Size / Custom	Document Number: GA-8IG1000MK
Rev	1.01
Date: 목요일, 六月 12, 2003	Sheet 3 of 36

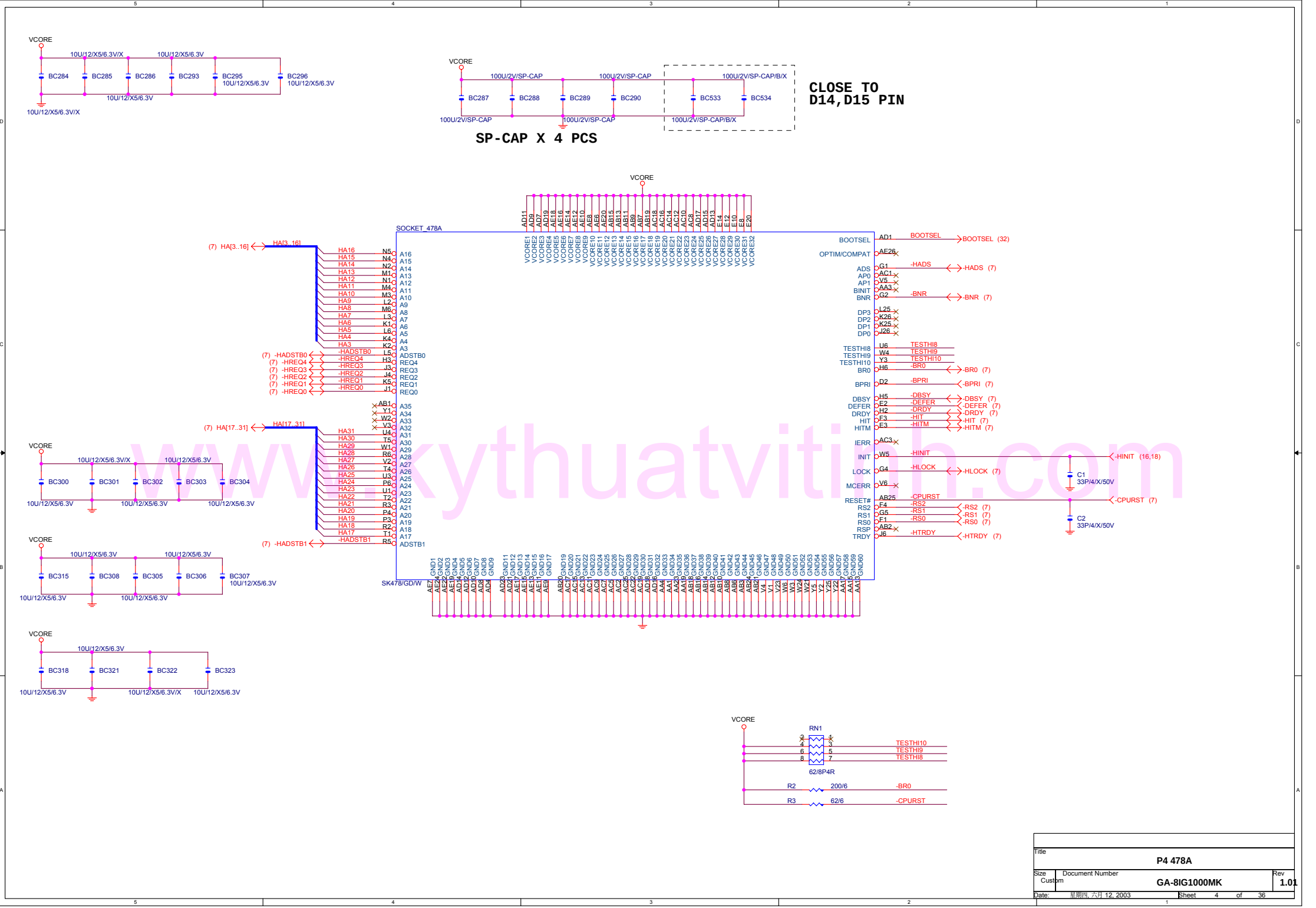

www.kythuatvitinh.com

Title	P4 478A
Size: Custom	Document Number: GA-8IG1000MK
Rev	1.01
Date: 星期四, 六月 12, 2003	Sheet 4 of 36

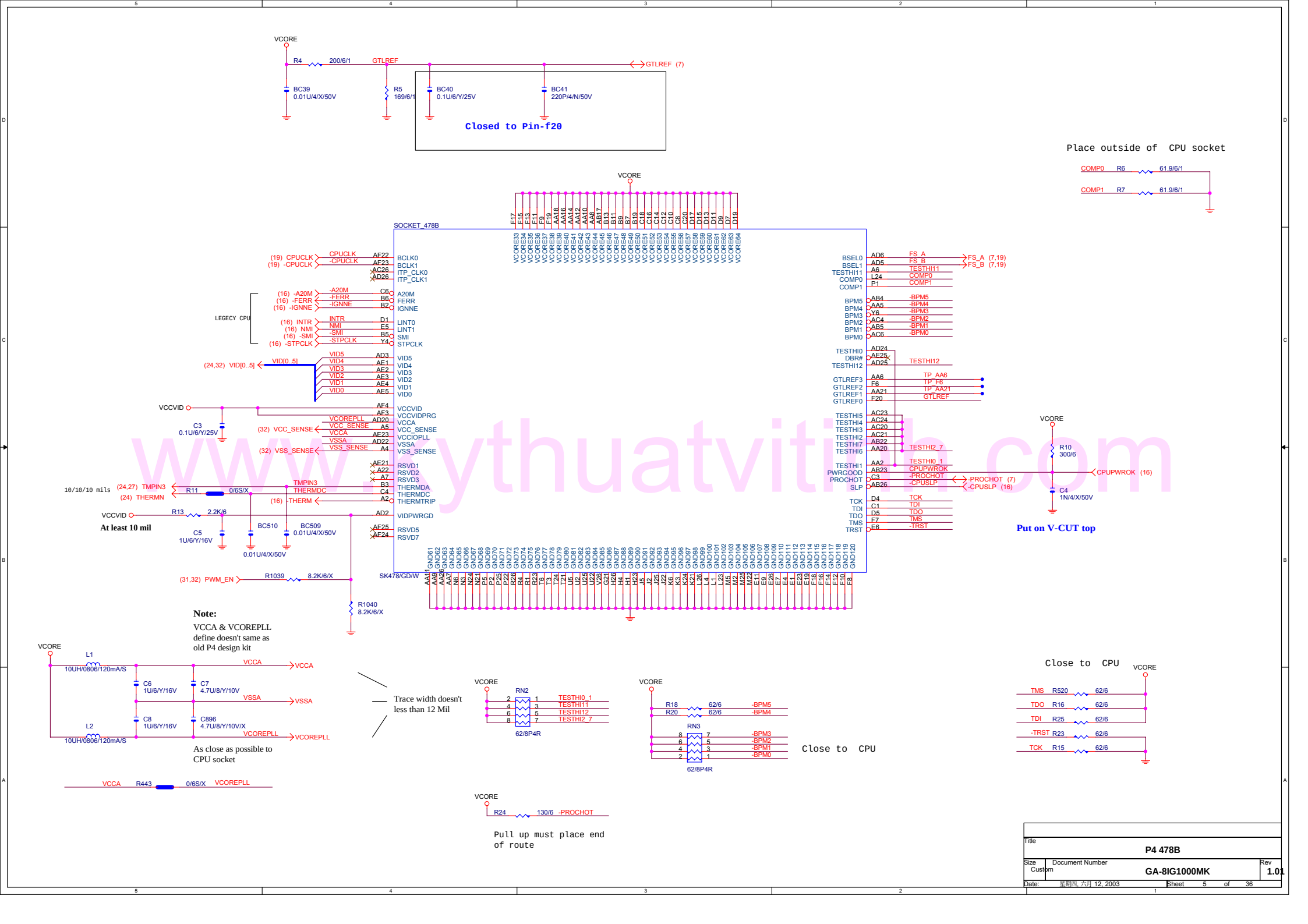

www.kythuatvitinh.com

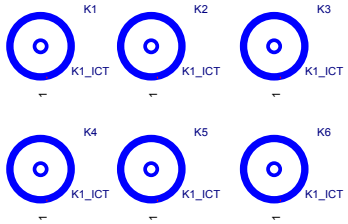

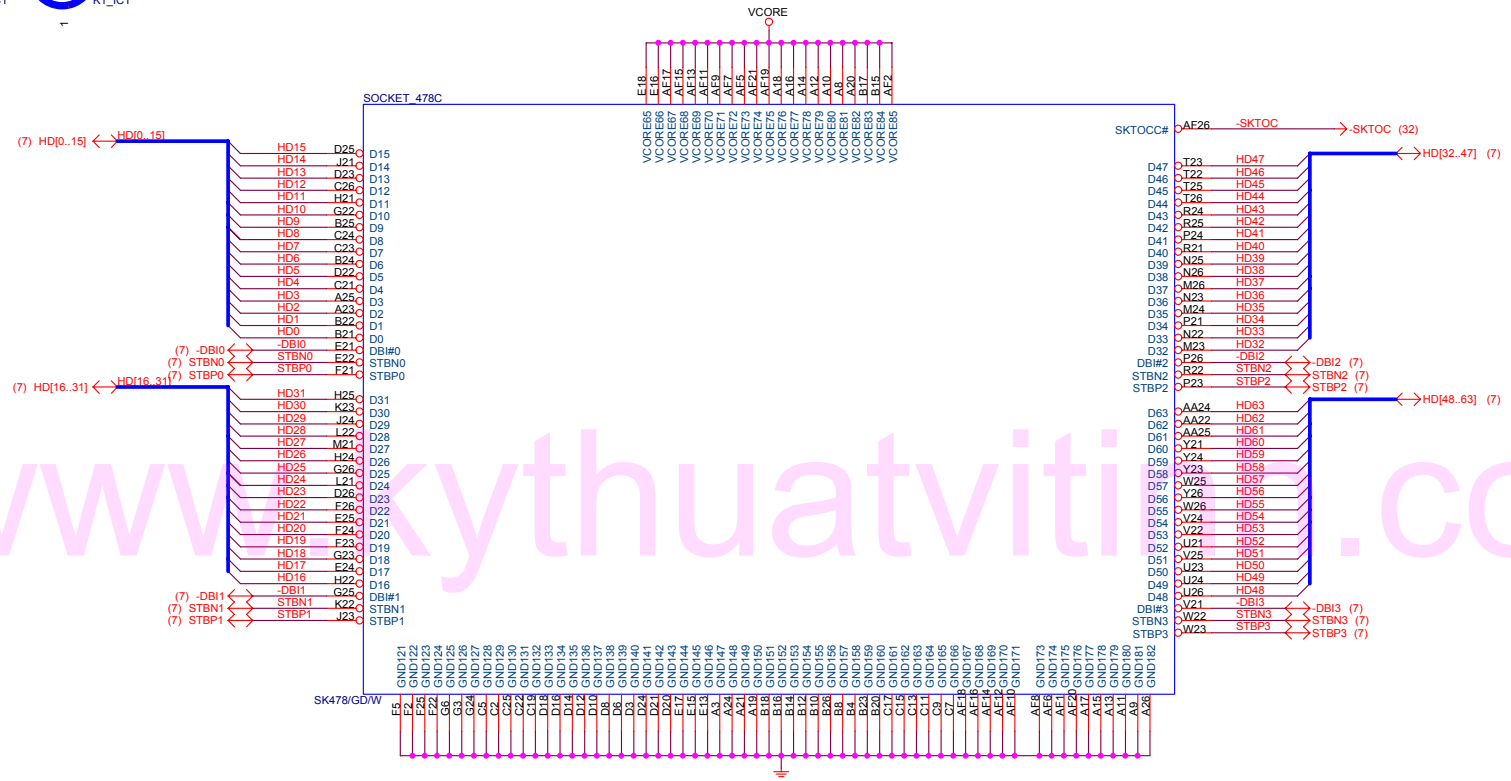

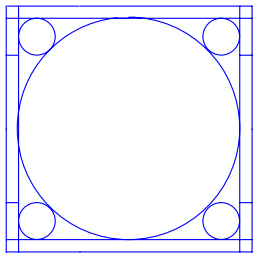

www.kythuatvitin.com

Title	P4 478C	
Size: Custom	Document Number: GA-8IG1000MK	Rev: 1.01
Date: 星期四, 六月 12, 2003	Sheet 6 of 36	

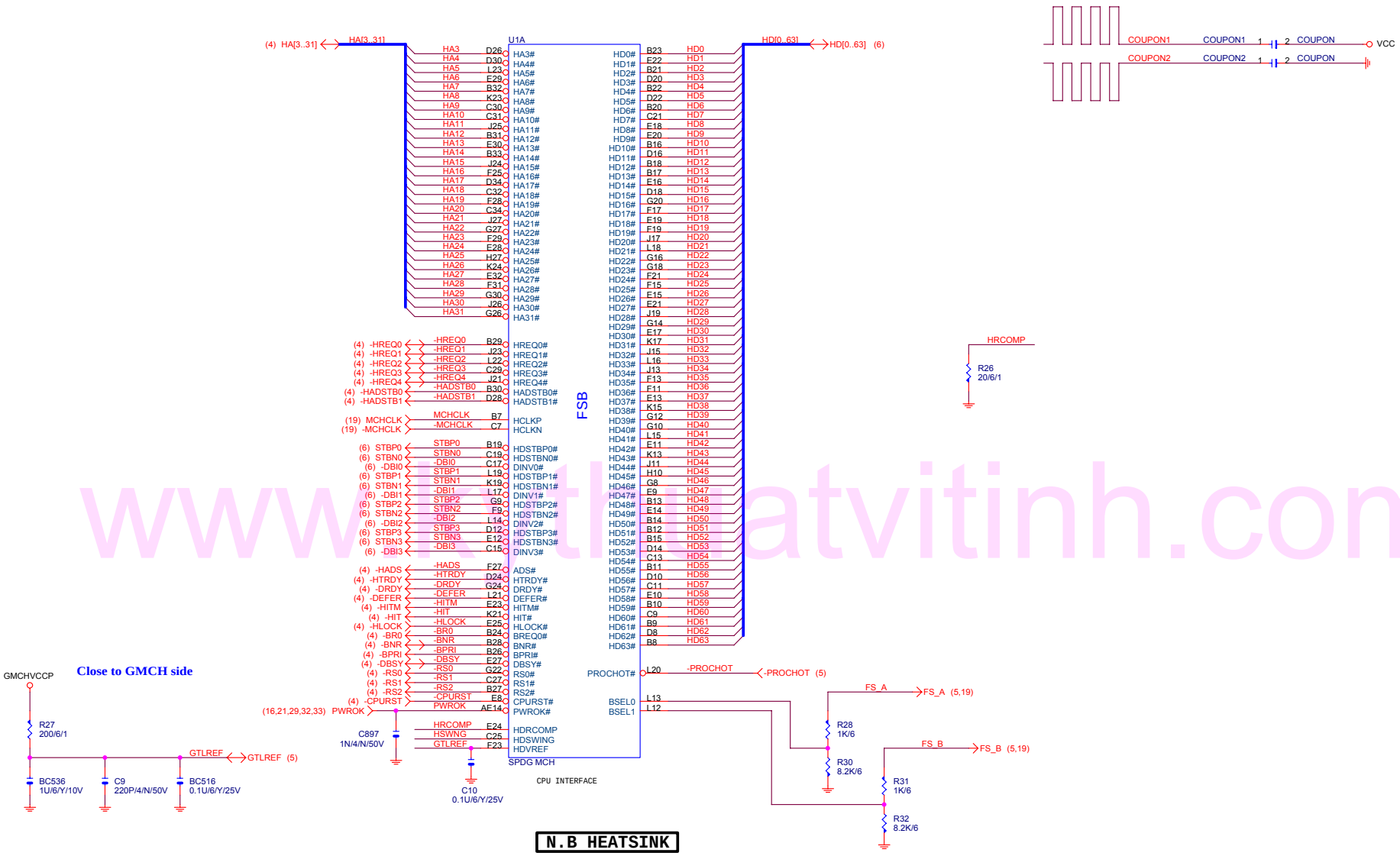

www.kthuatvitinh.com

Title	SPRINGDALE HOST		
Size: Custom	Document Number: GA-8IG1000MK		Rev: 1.01
Date: 星期四, 六月 12, 2003	Sheet 7 of 36		

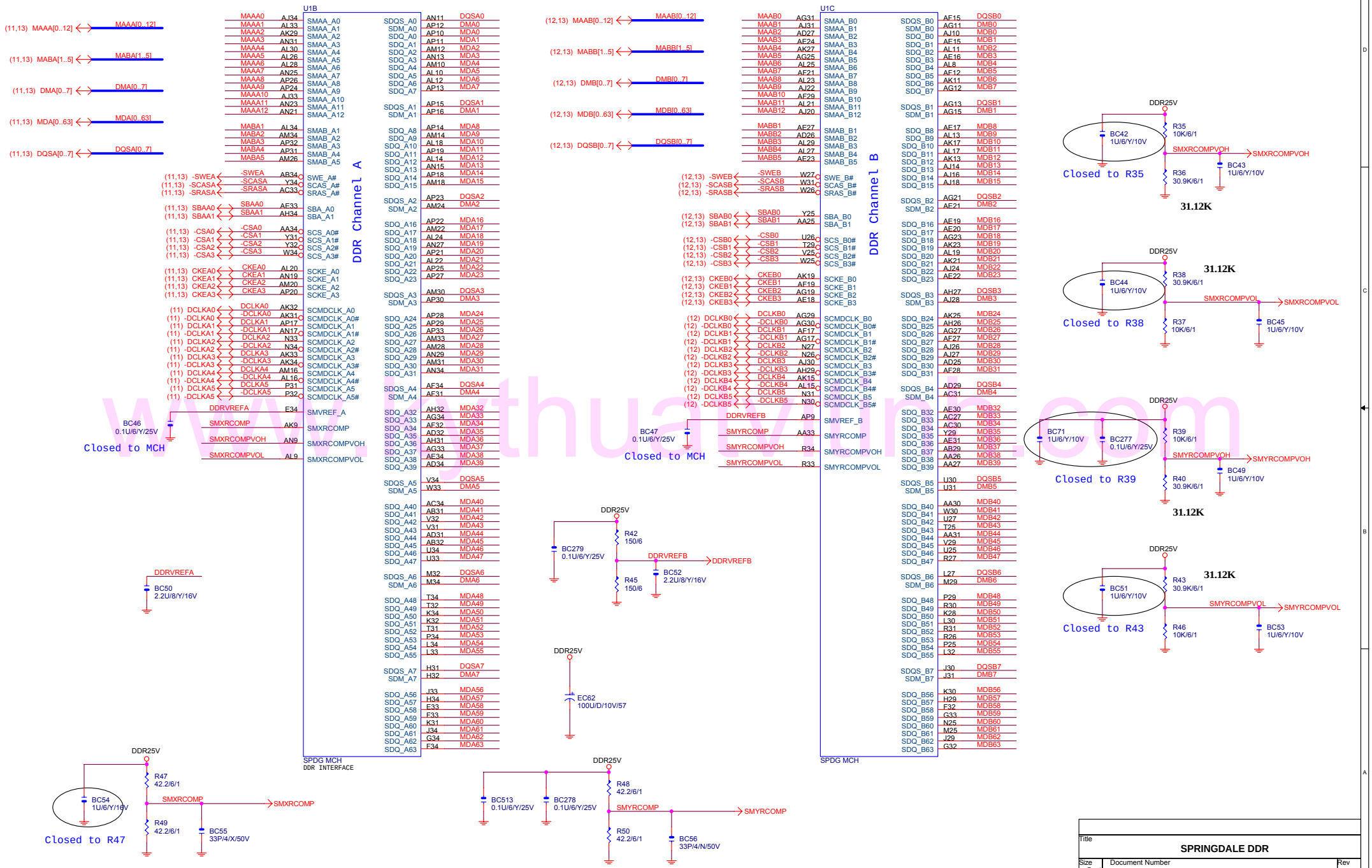

Title: SPRINGDALE DDR

Size: Custom | Document Number: GA-8IG1000MK | Rev: 1.01

Date: 星期四, 六月 12, 2003 | Sheet 8 of 36

www.ichthuaxinh.com

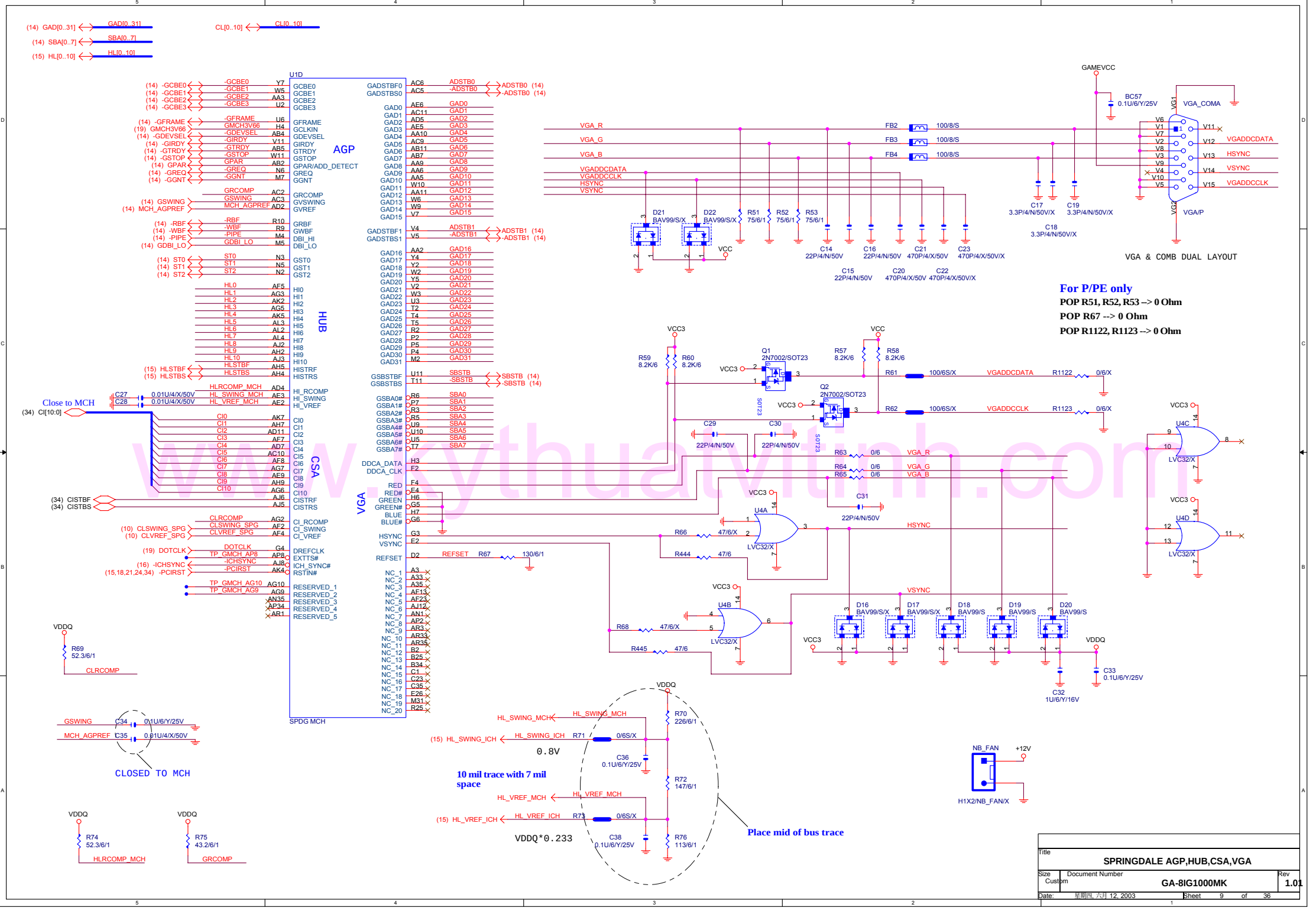

www.kythuattinh.com

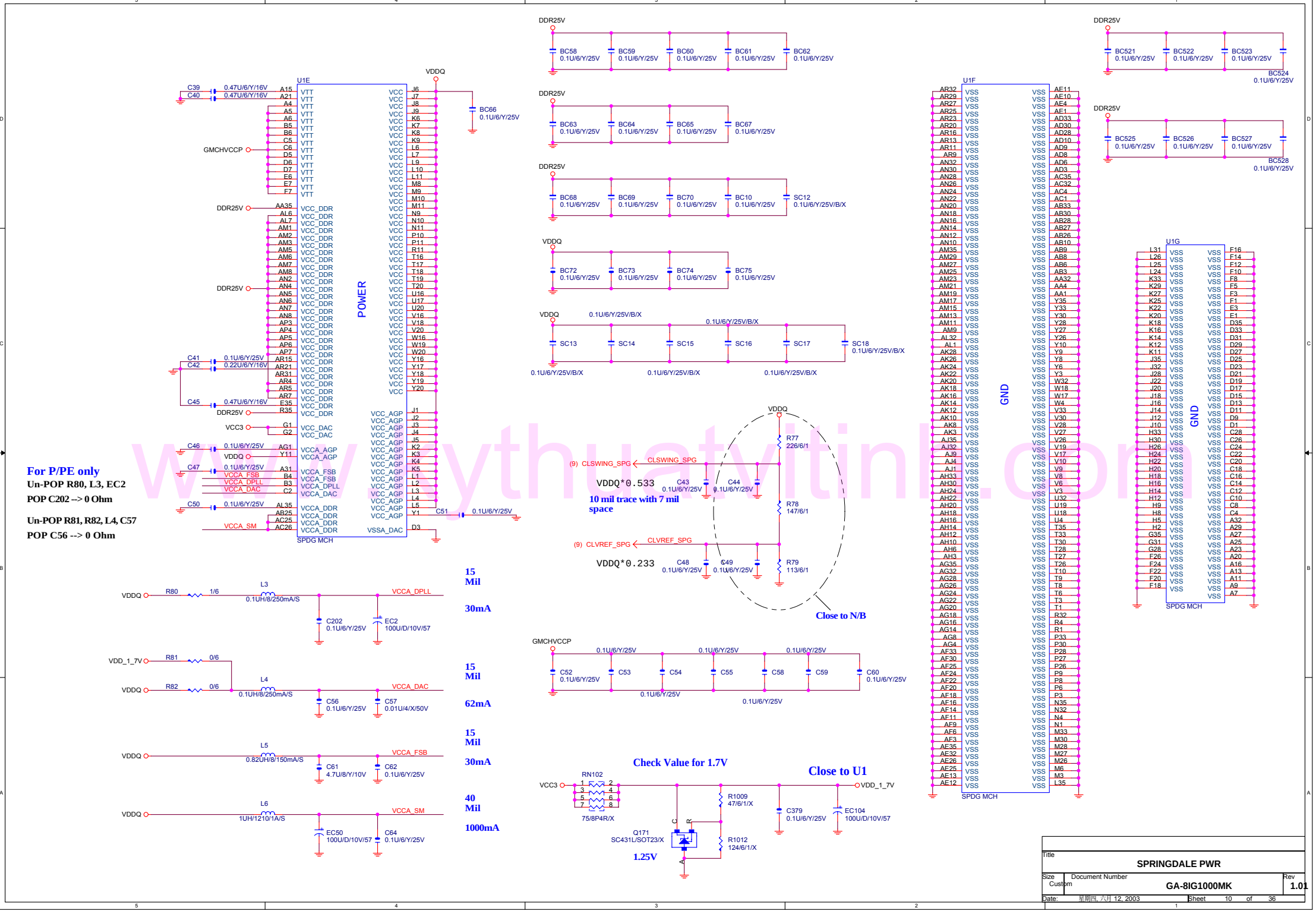

Title: SPRINGDALE PWR

Size: Custom | Document Number: GA-8IG1000MK | Rev: 1.01

Date: 星期四, 六月 12, 2003 | Sheet 10 of 36

www.vythuatvitinh.com

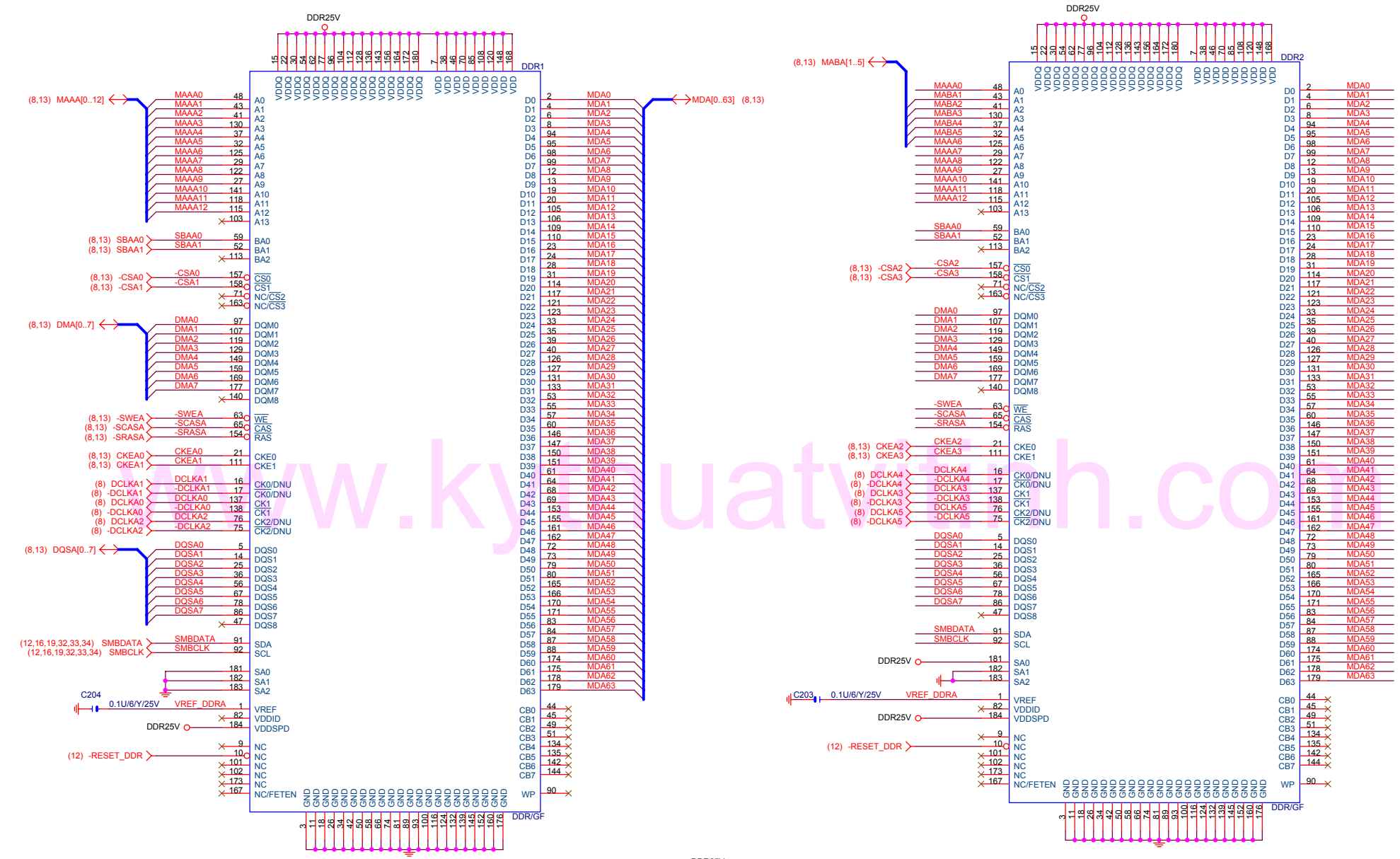

www.kyfuatwtch.com

GIGABYTE CORP.

Title: DDR1,2 CHANNEL A

Size: B | Document Number: GA-8IG1000MK | Rev: 1.01

Date: 星期四, 六月 12, 2003 | Sheet 11 of 36

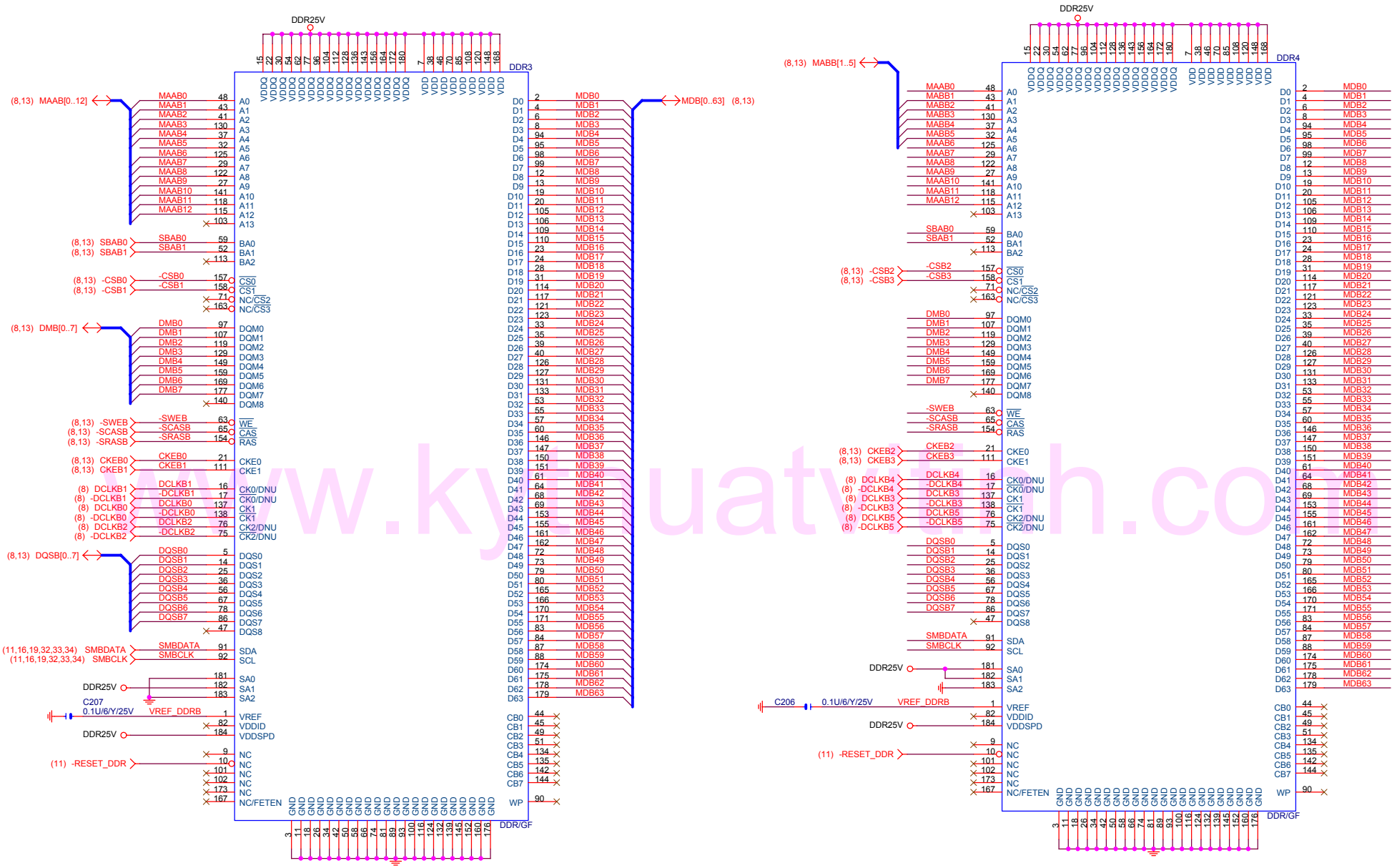

www.kytuatvinh.com

GIGABYTE CORP.

Title: DDR3,4 CHANNEL B

Size: B | Document Number: GA-8IG1000MK | Rev: 1.01

Date: 星期四, 六月 12, 2003 | Sheet 12 of 36

DDR TERMINATION

CHANNEL A

DDRVTT Decouple

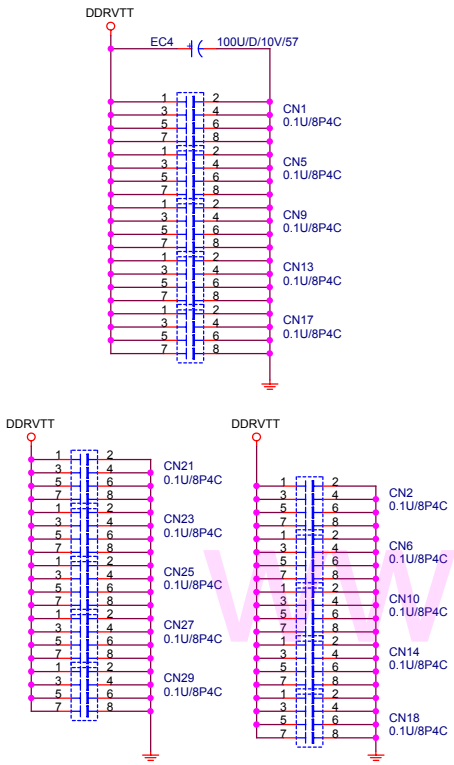

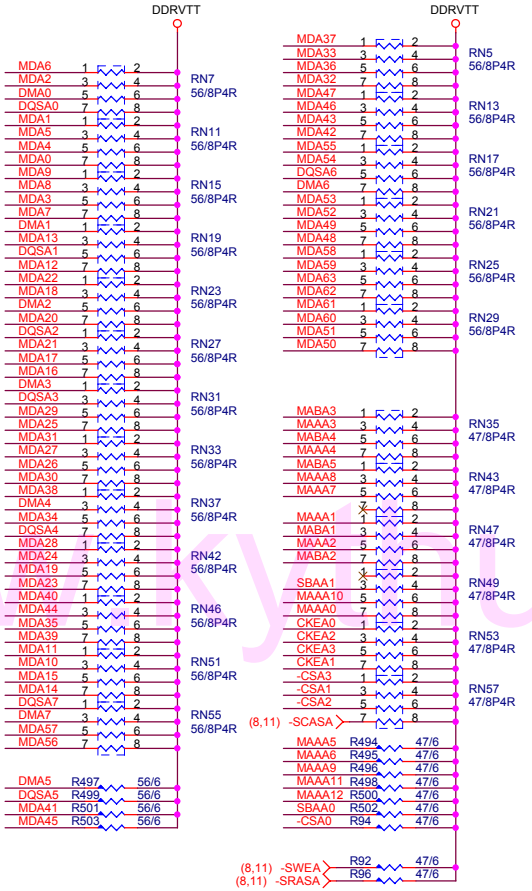

DDR25V Decouple

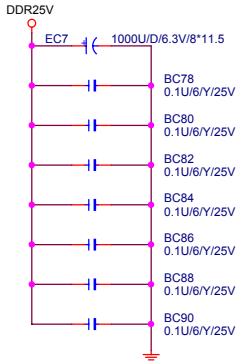

47 Ohms

SBAA[0:1] — SBAA[0:1] (8,11)

-CSA[0:3] — -CSA[0:3] (8,11)

CKEA[0:3] — CKEA[0:3] (8,11)

MABA[1..5] — MABA[1..5] (8,11)

MAAA[0..12] — MAAA[0..12] (8,11)

56 Ohms

DQSA[0..7] — DQSA[0..7] (8,11)

DMA[0..7] — DMA[0..7] (8,11)

MDA[0..63] — MDA[0..63] (8,11)

CHANNEL B

DDRVTT Decouple

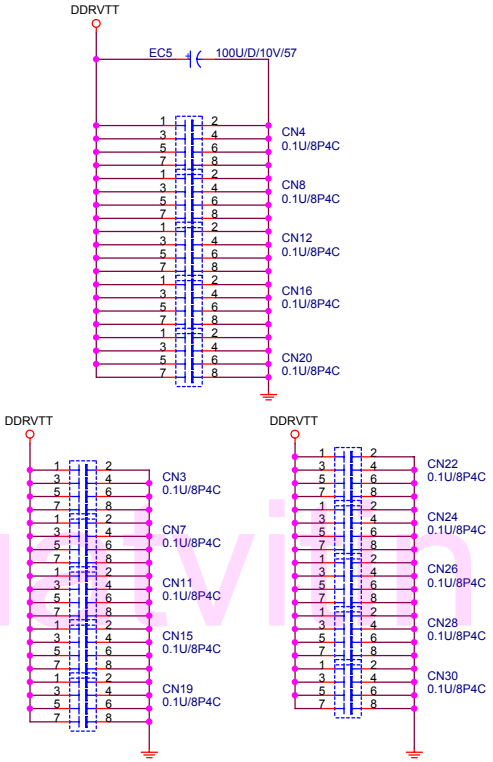

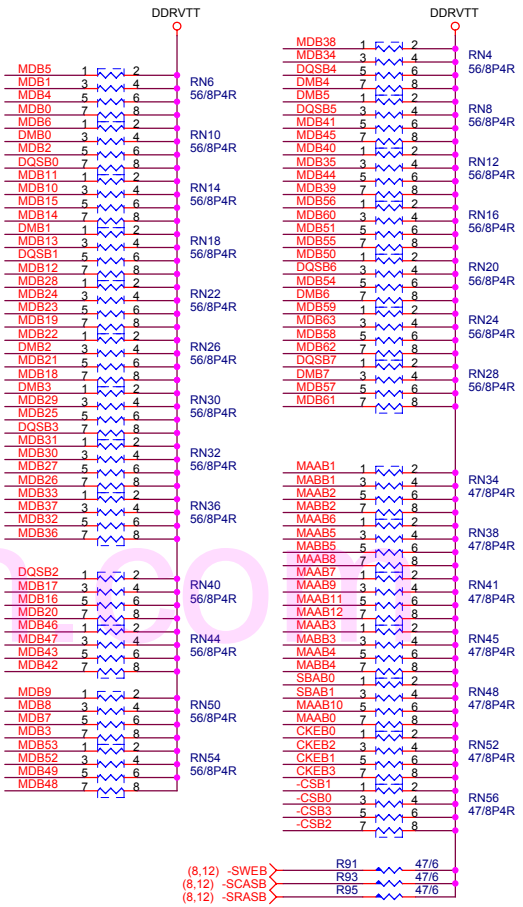

DDR25V Decouple

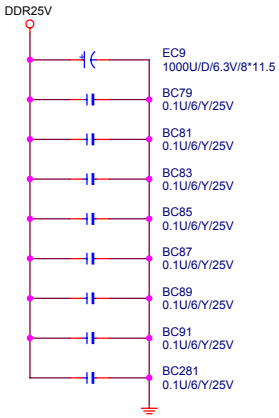

47 Ohms

SBAB[0:1] — SBAB[0:1] (8,12)

-CSB[0:3] — -CSB[0:3] (8,12)

CKEB[0:3] — CKEB[0:3] (8,12)

MABB[1..5] — MABB[1..5] (8,12)

MAAB[0..12] — MAAB[0..12] (8,12)

56 Ohms

DQSB[0..7] — DQSB[0..7] (8,12)

DMB[0..7] — DMB[0..7] (8,12)

MDB[0..63] — MDB[0..63] (8,12)

GIGABYTE CORP.		
Title	DDR TERMINATION	
Size B	Document Number GA-8IG1000MK	Rev 1.01
Date: 星期四, 六月 12, 2003	Sheet 13 of 36	

www.kytechnology.com

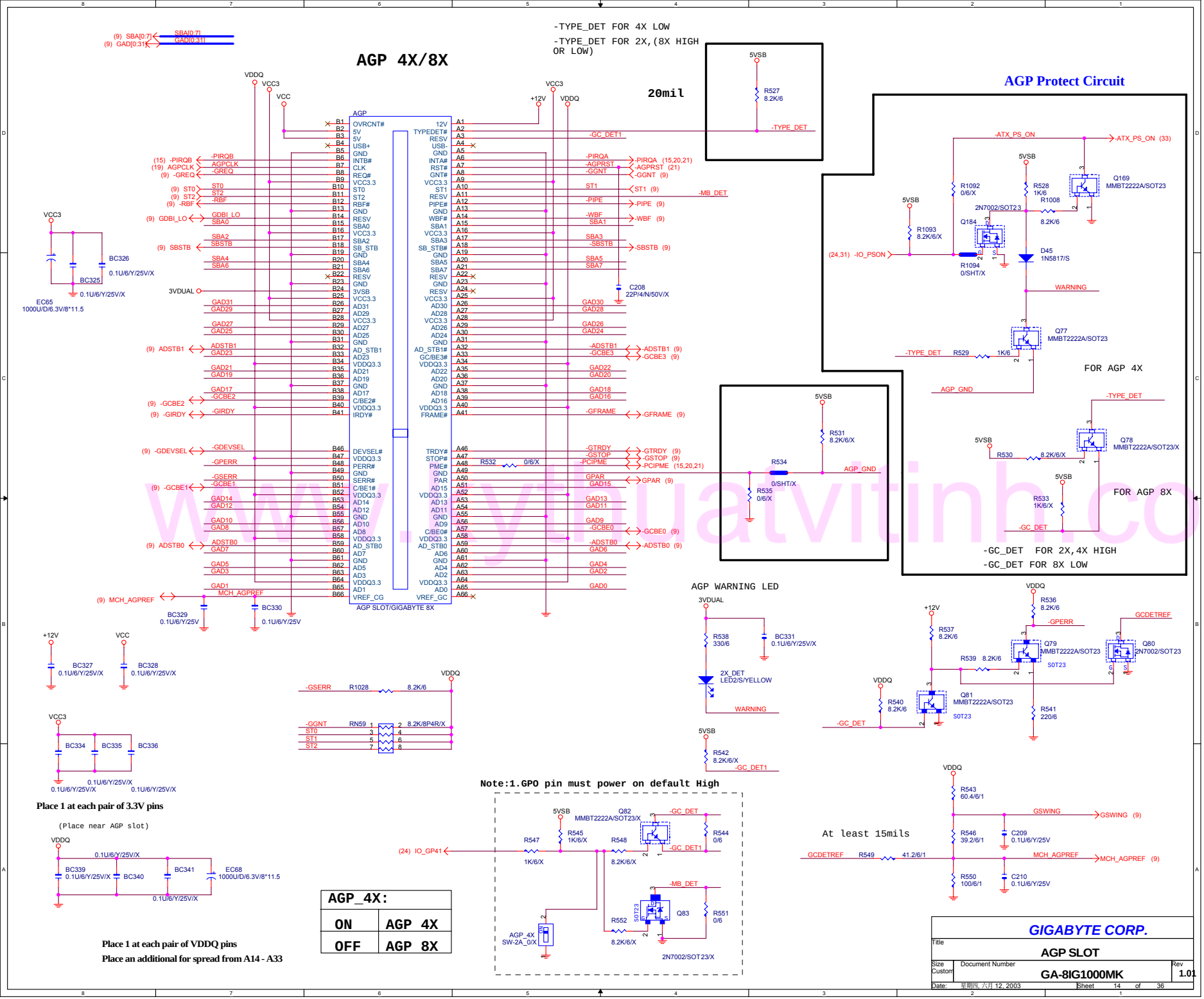

www.yhuatvtinh.com

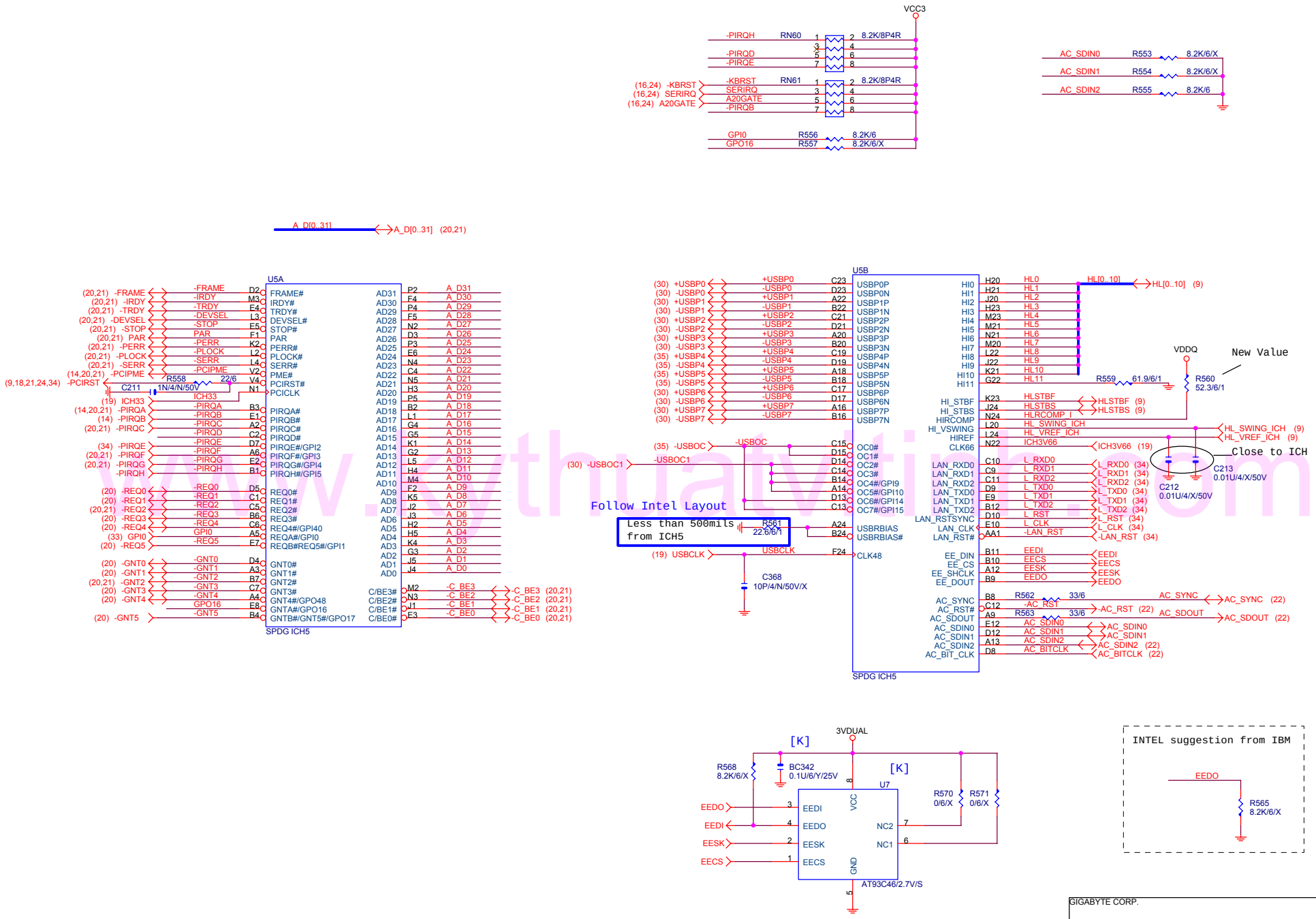

www.mythatvtuts.com

GIGABYTE CORP.

Title: ICH5 PCI, USB, HUB, LAN

Size	Document Number	Rev
B	GA-8IG1000MK	1.01

Date: 星期四, 六月 12, 2003 Sheet 15 of 36

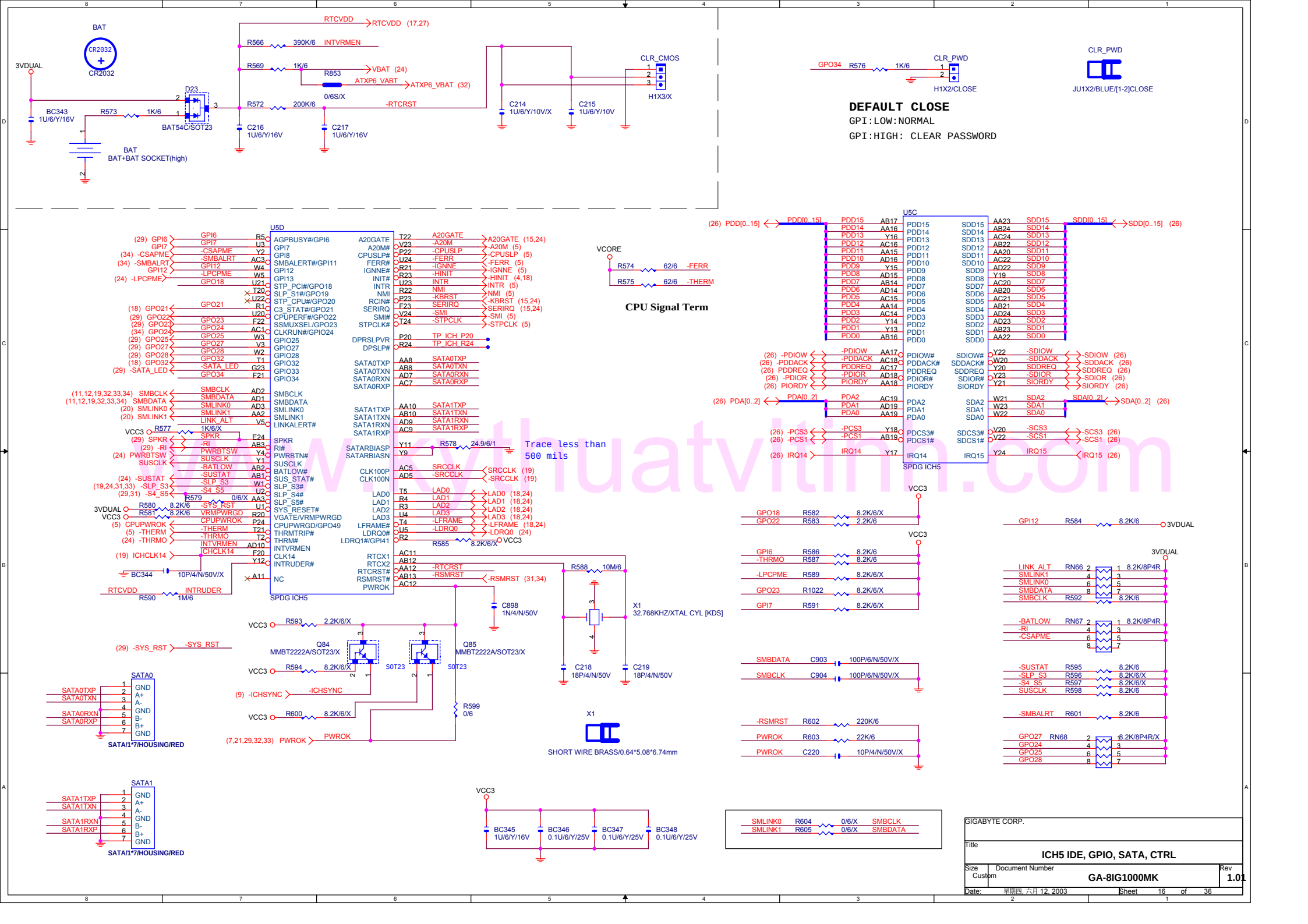

www.kythuatvitinh.com

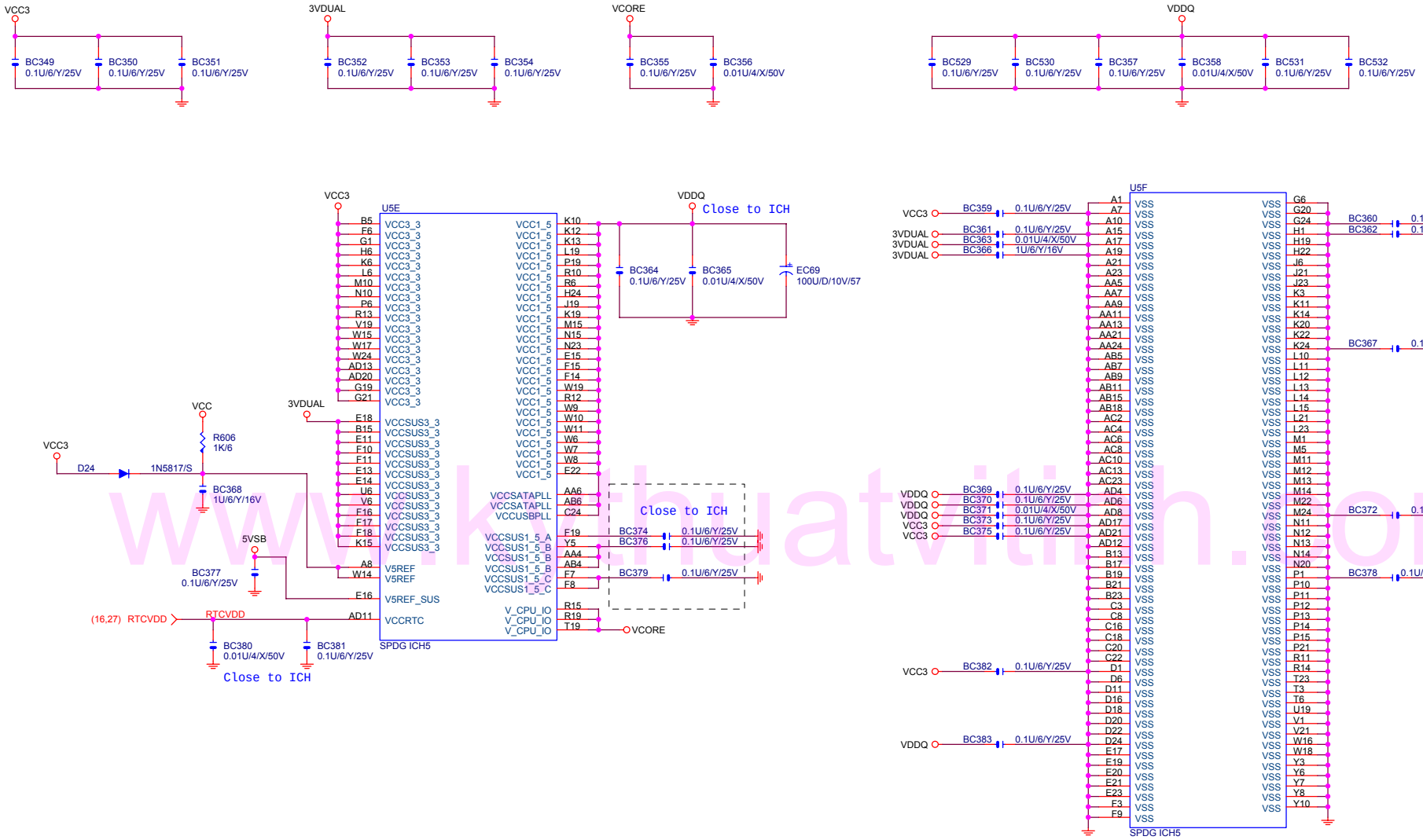

www.kthuatvitinh.com

GIGABYTE CORP.

Title: **ICH5 VCC, GND**

Size	Document Number	Rev
B	GA-8IG1000MK	1.01

Date: 星期四, 六月 12, 2003 Sheet 17 of 36

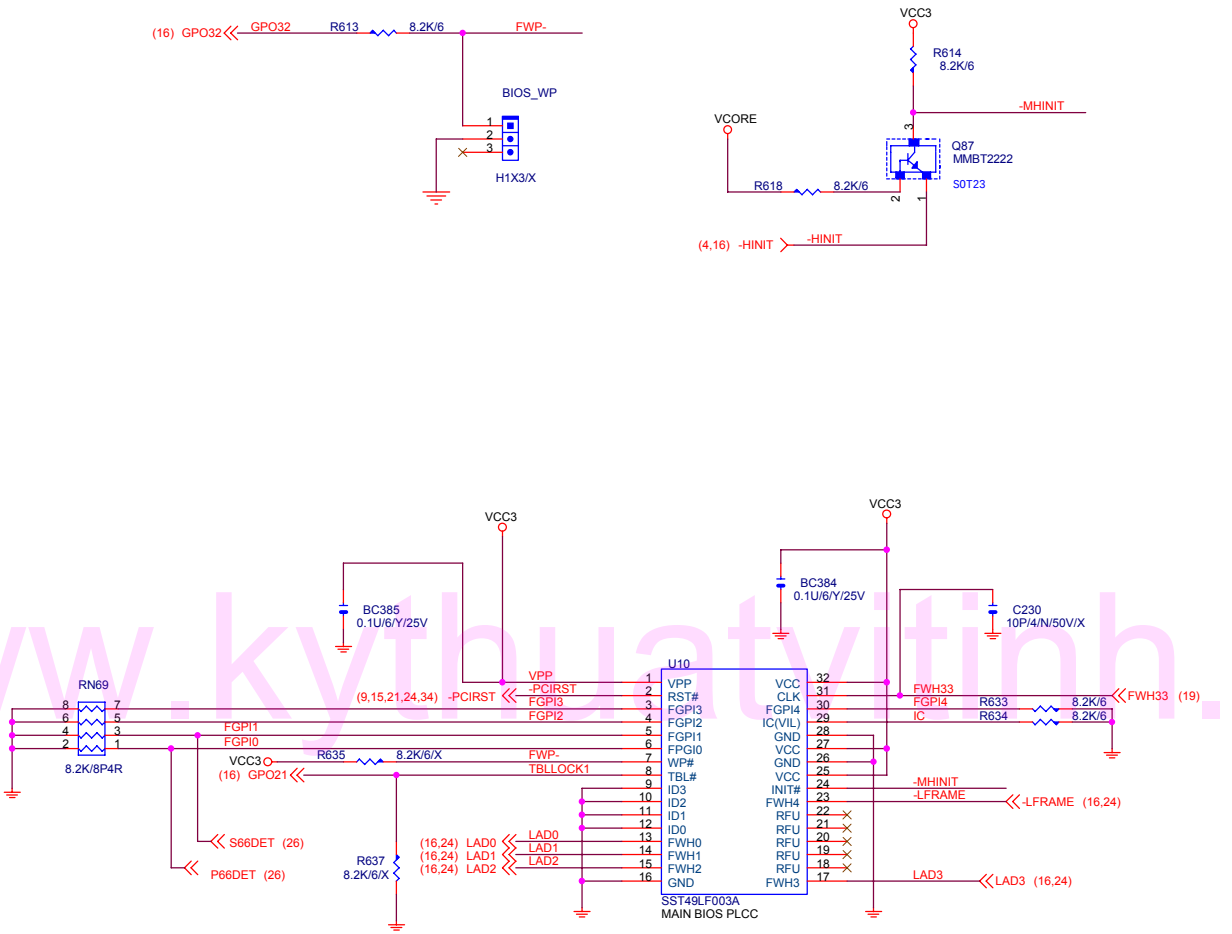

www.kythuatvitinh.com

ADD WINBOUD FWH SEC. SOURCE

PLCC32P/SOCKET/SMD

GIGABYTE CORP.		
Title: FWH		
Size: B	Document Number: GA-8IG1000MK	Rev: 1.01
Date: 星期四, 六月 12, 2003	Sheet 18 of 36	

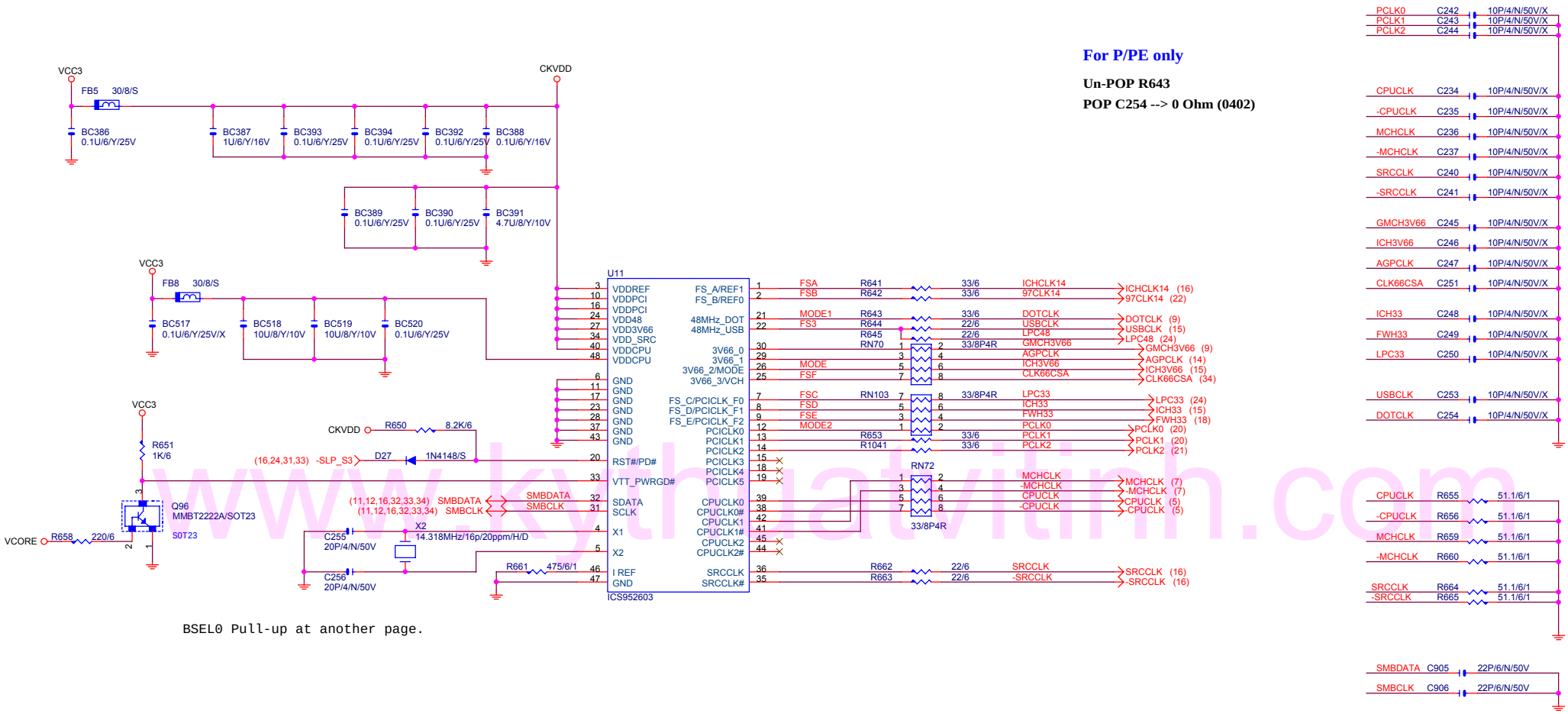

For P/PE only

Un-POP R643

POP C254 --> 0 Ohm (0402)

BSEL0 Pull-up at another page.

www.kythuatvitinh.com

CYPRESS CY28405

FS_E	FS_D	FS_C	FS_B	FS_A	Clock
1	1	0	0	0	100.9MHz
1	1	0	0	1	133.9MHz
1	1	0	1	1	166.9MHz
1	1	0	1	0	200.9MHz

ICS952603

FS_E	FS_3	FS_C	FS_B	FS_A	Clock
1	0	0	0	0	100MHz
1	0	0	0	1	133MHz
1	0	0	1	1	166MHz
1	0	0	1	0	200MHz

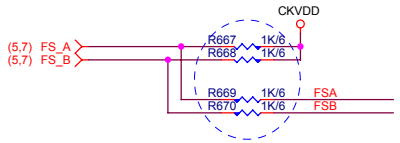

Close to Clock GEN

ICS + CYPRESS CO-LAYOUT

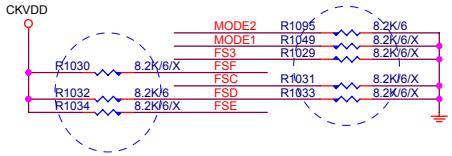

Close to Clock GEN

For Pin 20 PD# MODE

GIGABYTE CORP.	
Title	CLOCK GENERATOR
Size: Custom	Document Number: GA-8IG1000MK
Rev	1.01
Date: 星期四, 六月 12, 2003	Sheet 19 of 36

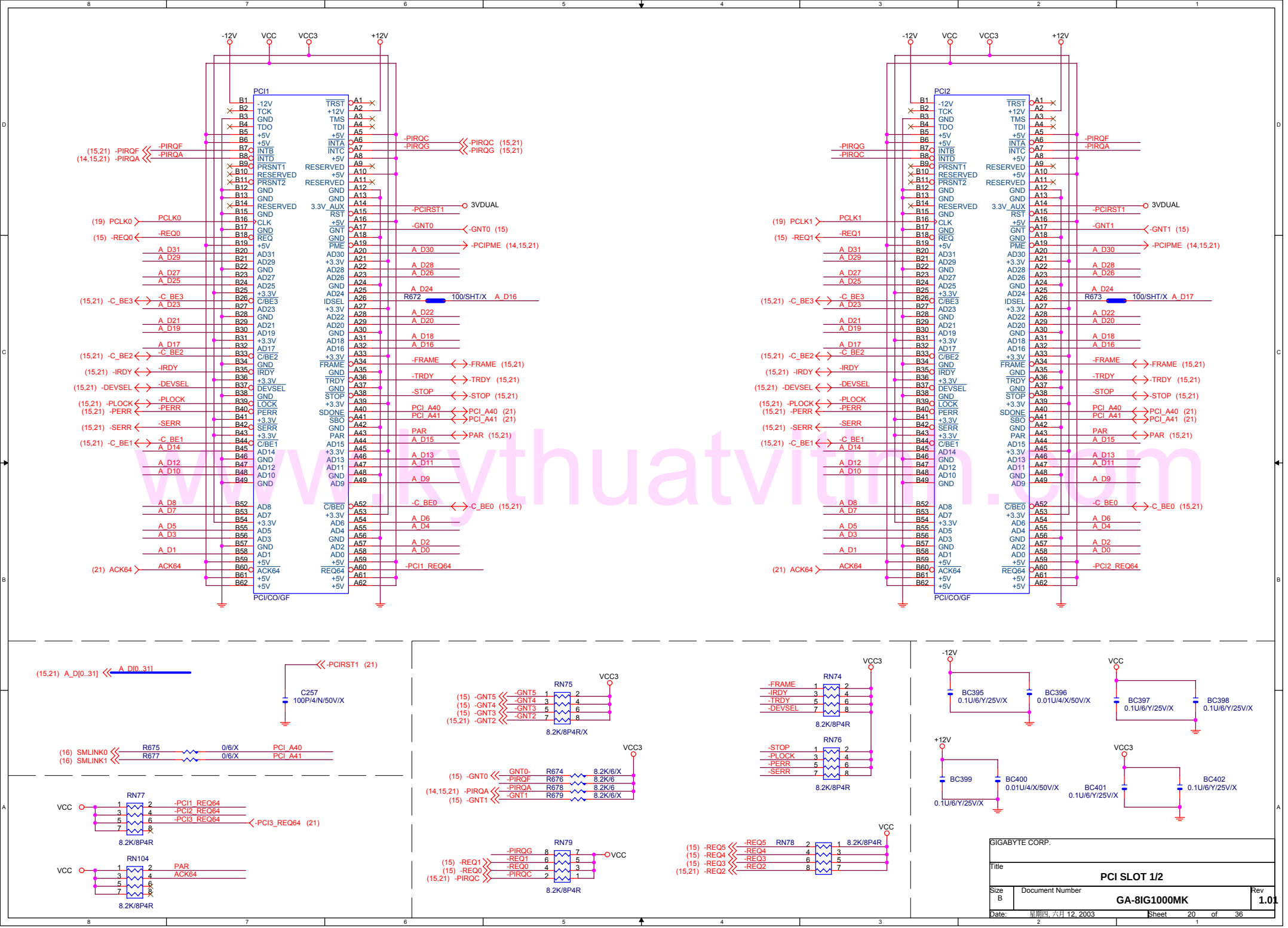

www.kythuatvitinh.com

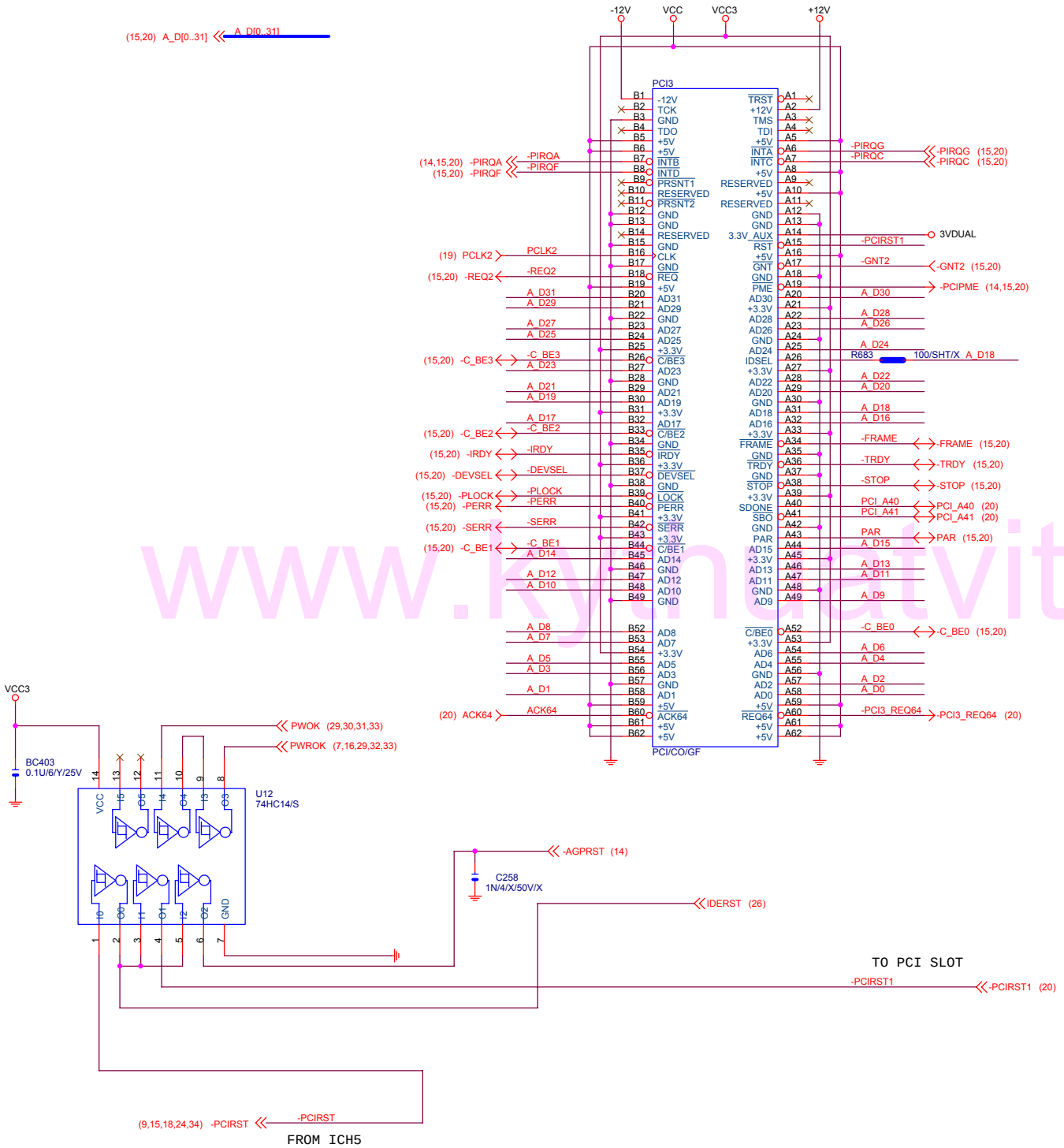

www.kyuatvitinh.com

GIGABYTE CORP.	
Title	PCI SLOT 3
Size B	Document Number GA-8IG1000MK
Rev	1.01
Date: 星期四, 六月 12, 2003	Sheet 21 of 36

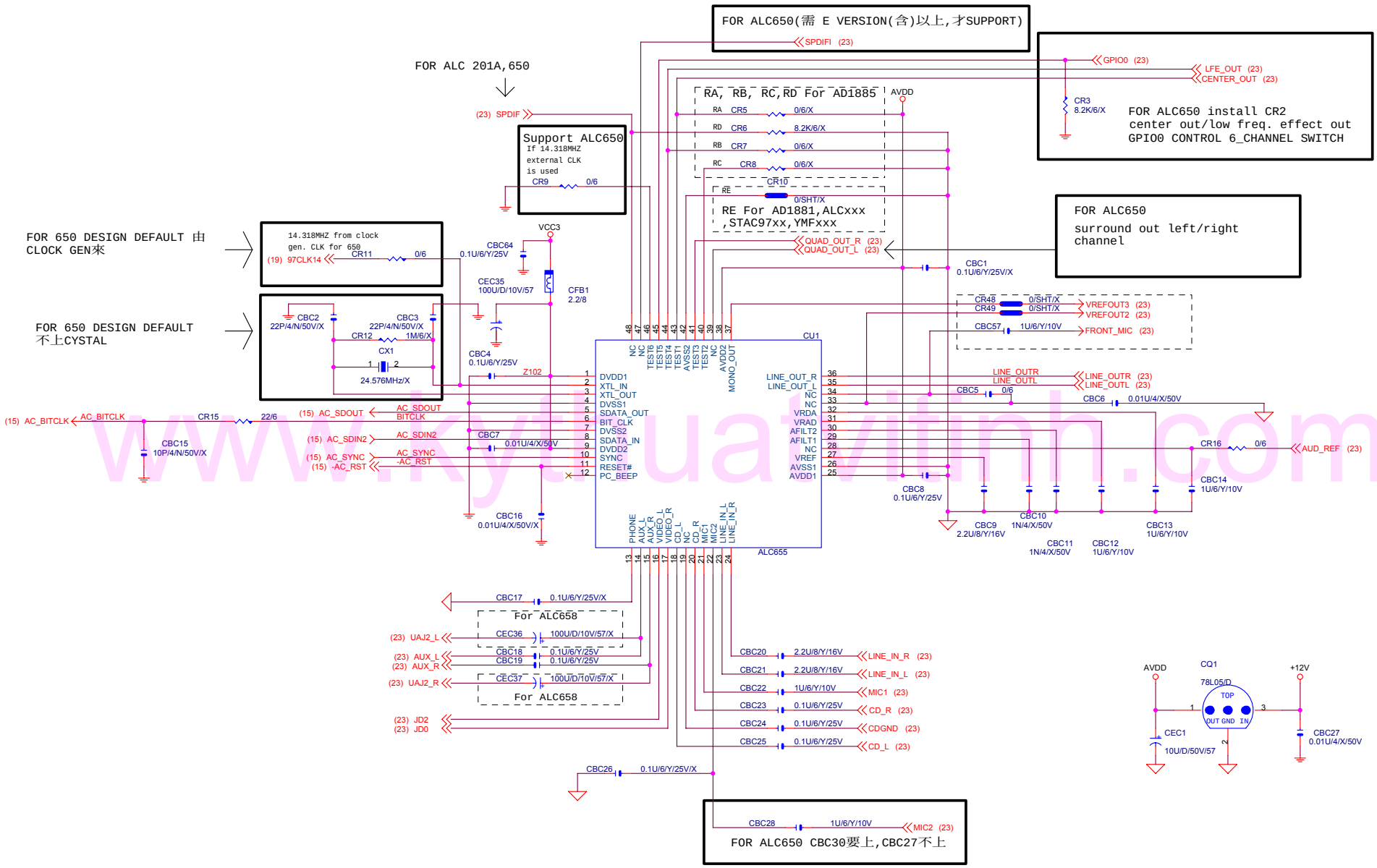

www.kytuatvitinh.com

GIGABYTE CORP.	
Title	CODEC
Size Custom	Document Number GA-8IG1000MK Rev 1.01
Date: 星期四, 六月 12, 2003	Sheet 22 of 36

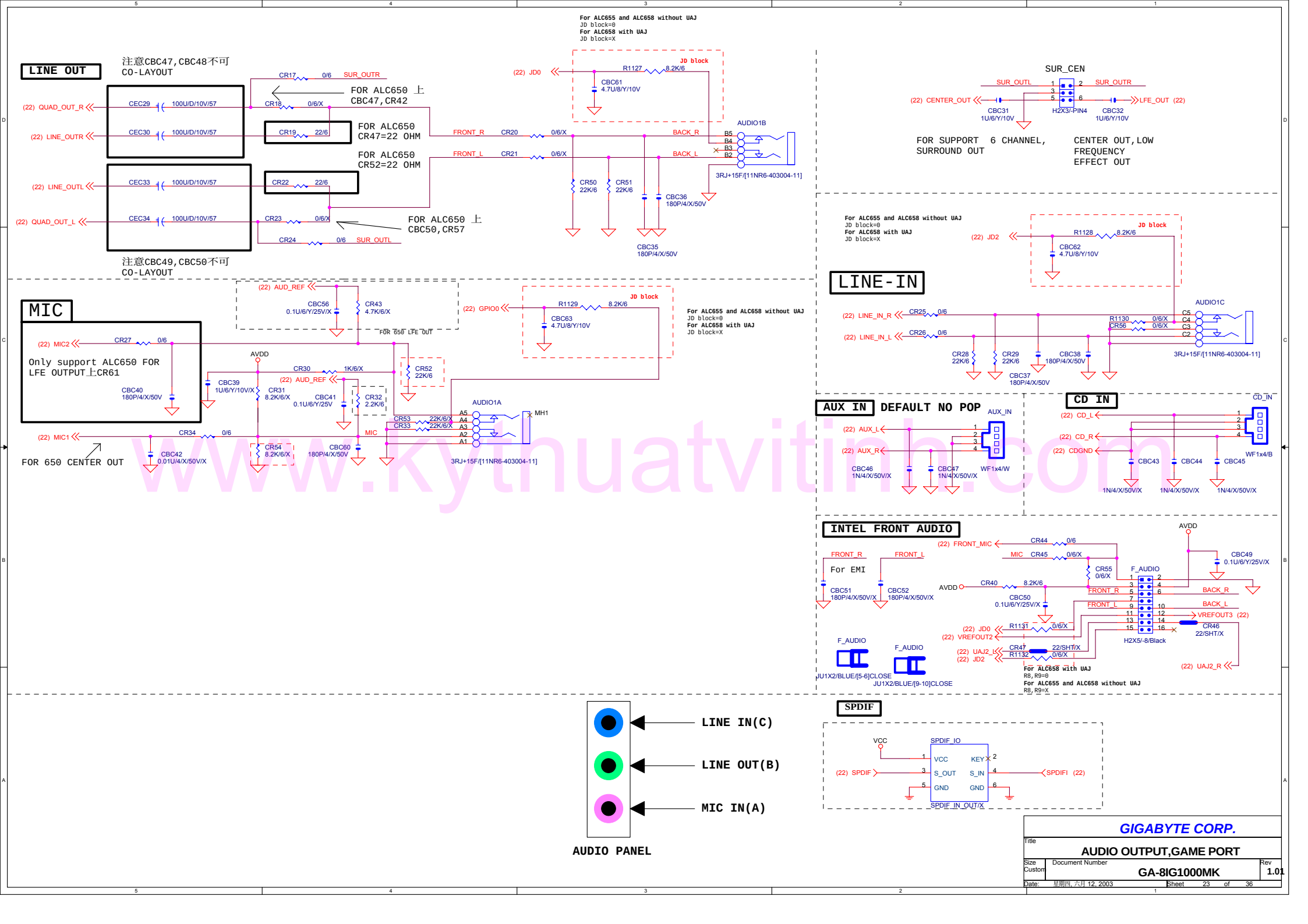

www.kythuatvitinh.com

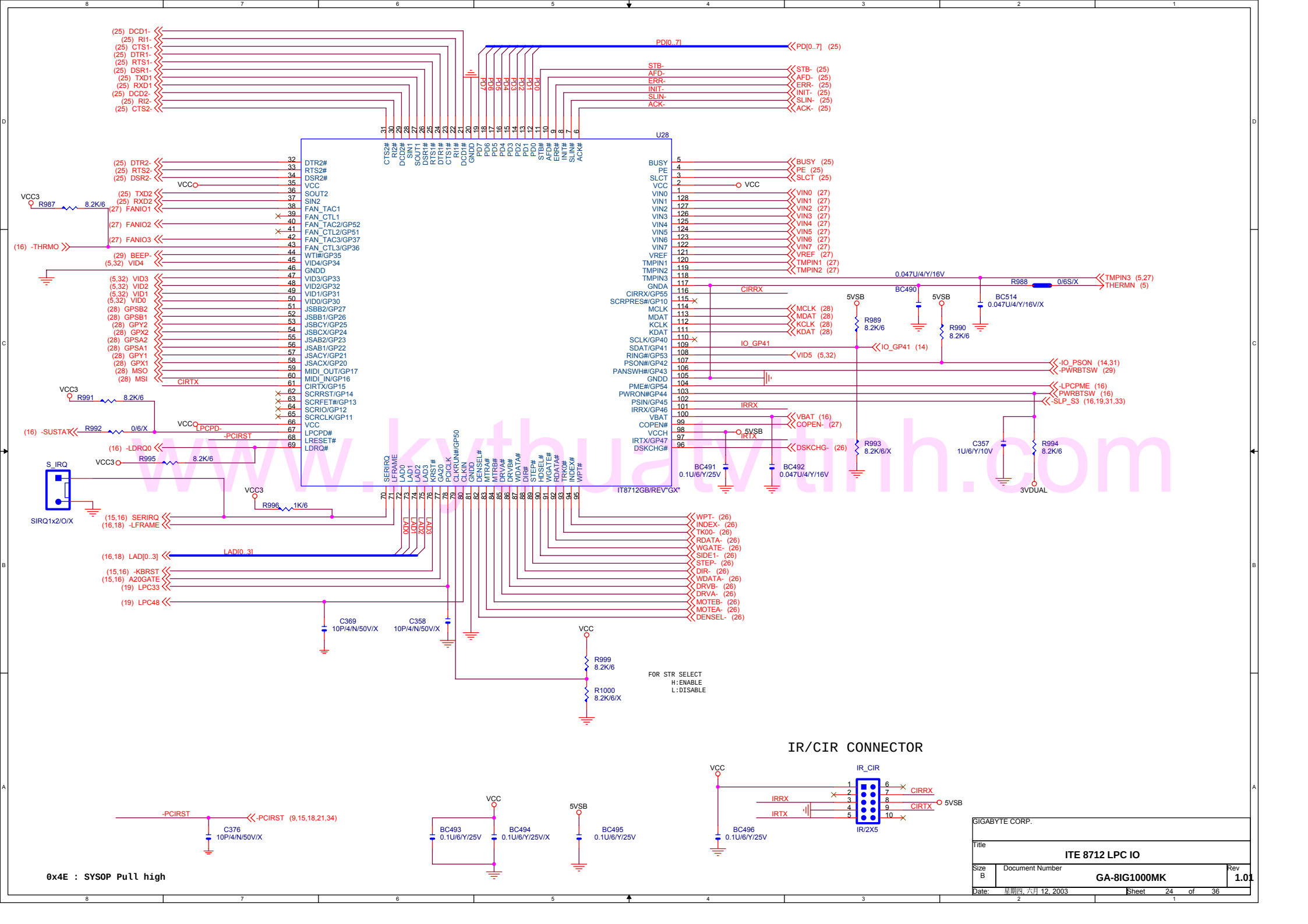

www.kythuattinh.com

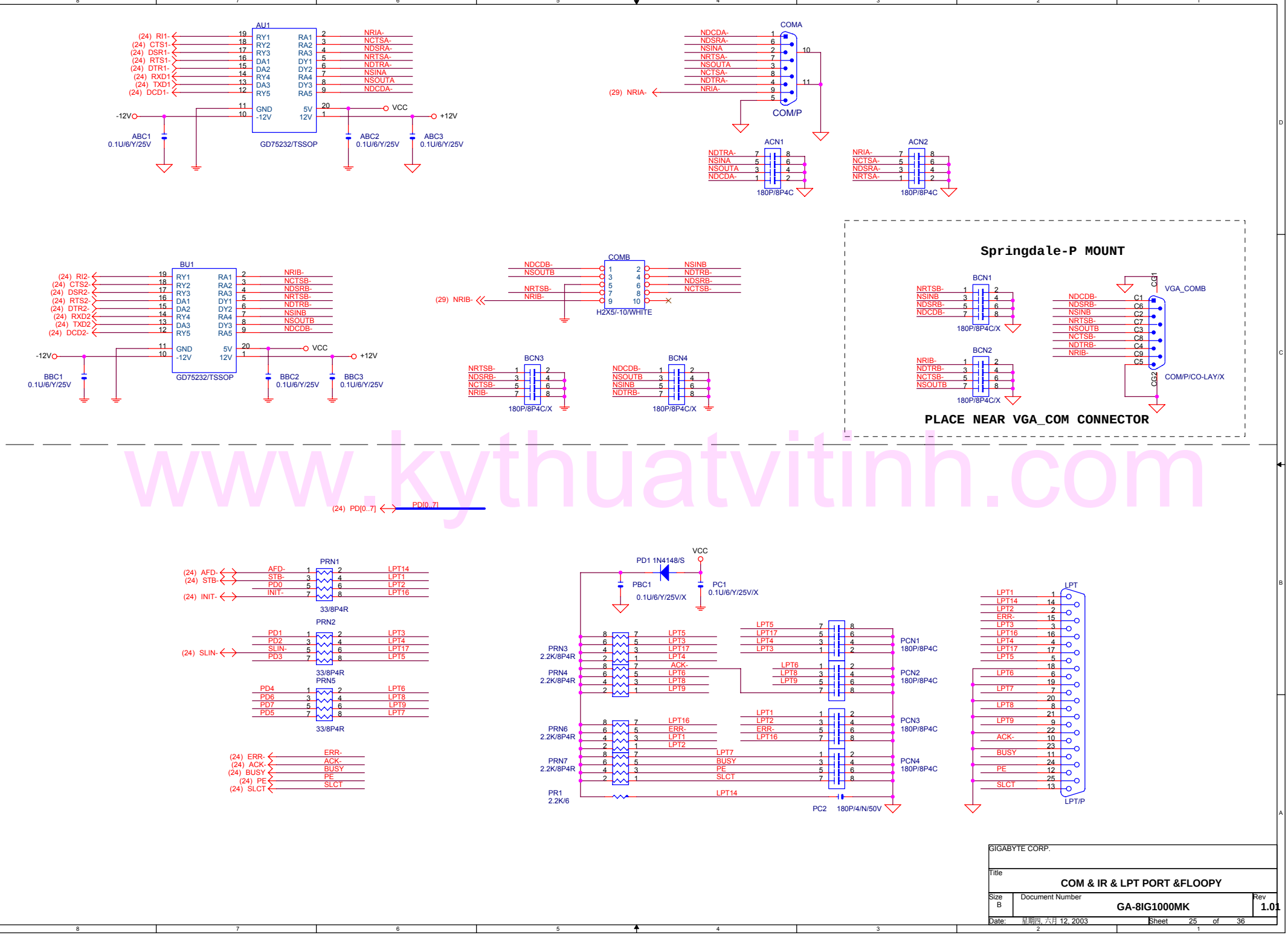

www.kythuatvitinh.com

GIGABYTE CORP.	
Title	COM & IR & LPT PORT &FLOOPY
Size B	Document Number GA-8IG1000MK
Rev	1.01
Date: 星期四, 六月 12, 2003	Sheet 25 of 36

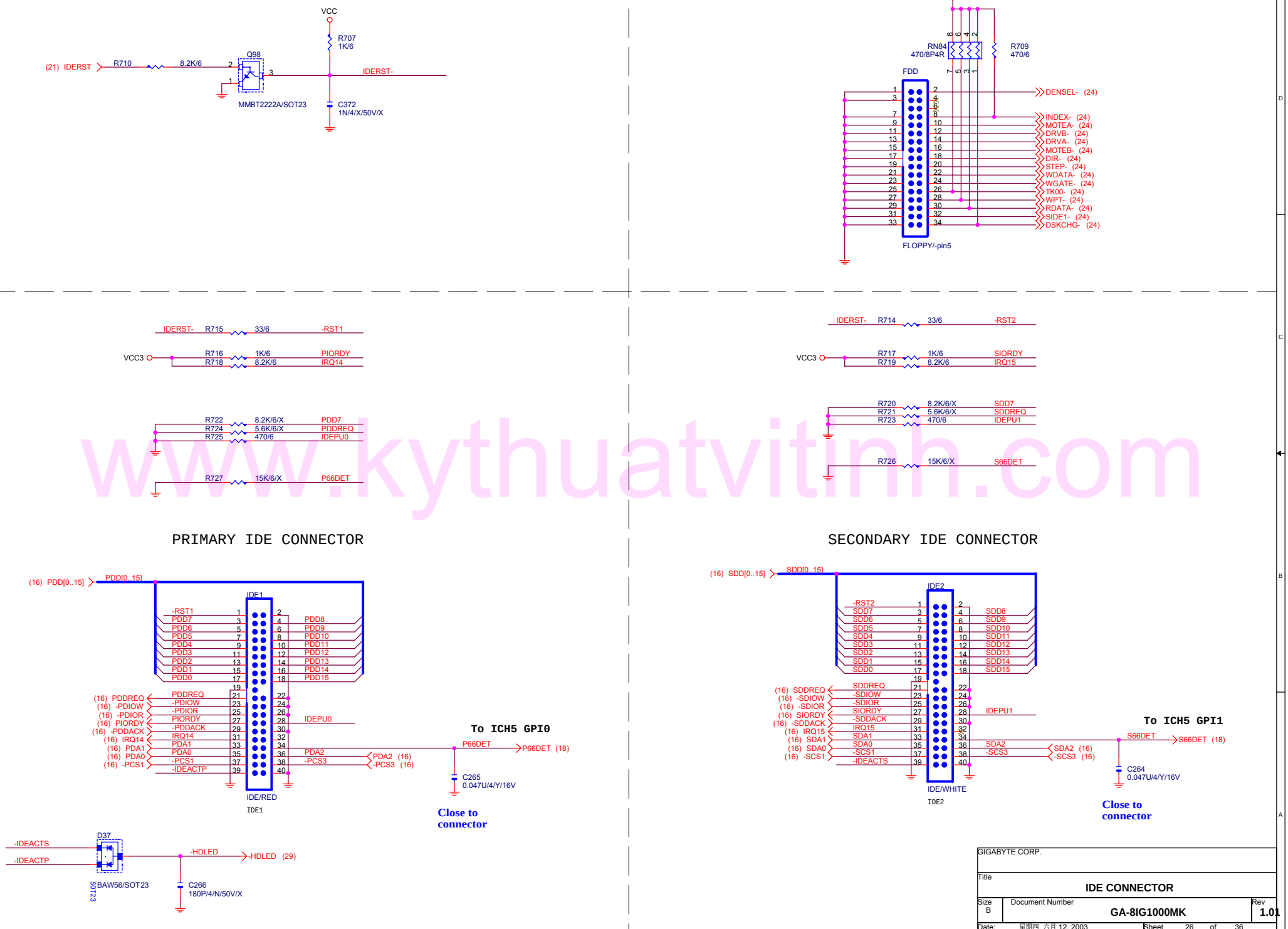

www.kythuatvitinh.com

GIGABYTE CORP.	
Title	IDE CONNECTOR
Size B	Document Number GA-8IG1000MK
Rev	1.01
Date: 星期四, 六月 12, 2003	Sheet 26 of 36

Hardware Monitor circuits

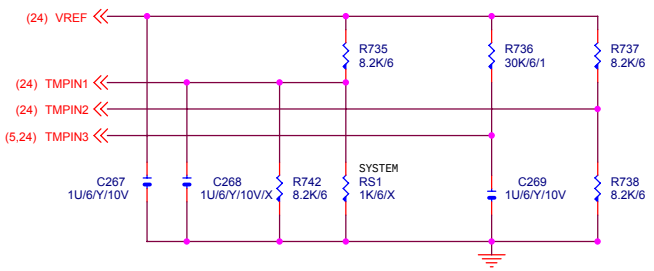

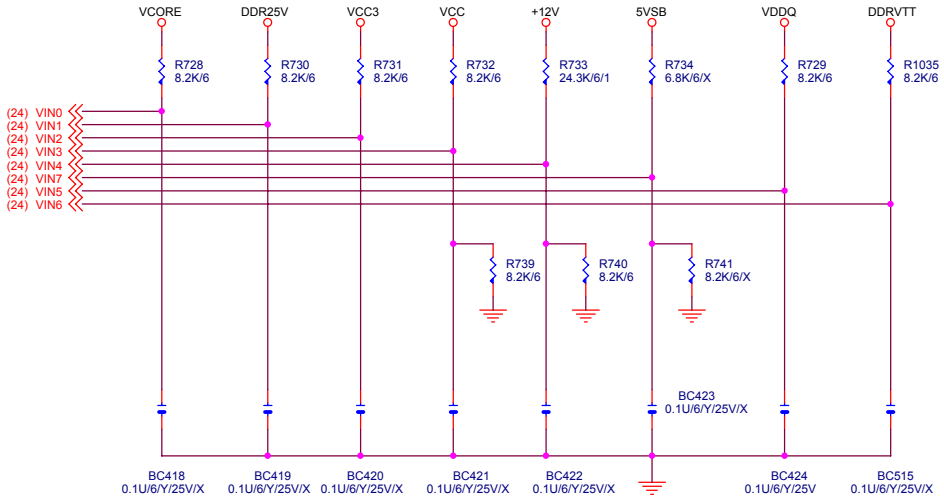

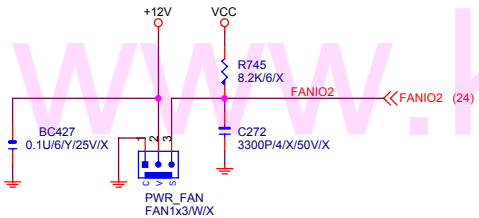

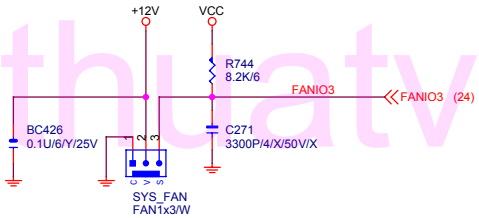

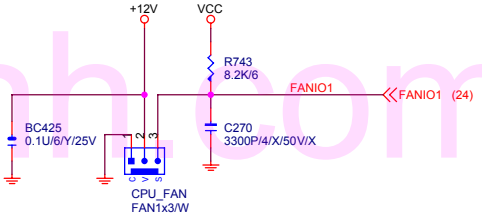

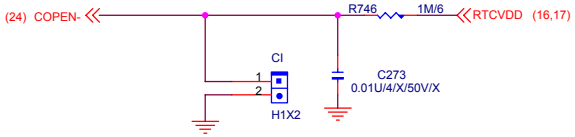

www.kythuatvitinh.com

GIGABYTE CORP.		
Title	FAN/HWMO	
Size B	Document Number GA-8IG1000MK	Rev 1.01
Date: 星期四, 六月 12, 2003	Sheet 27 of 36	

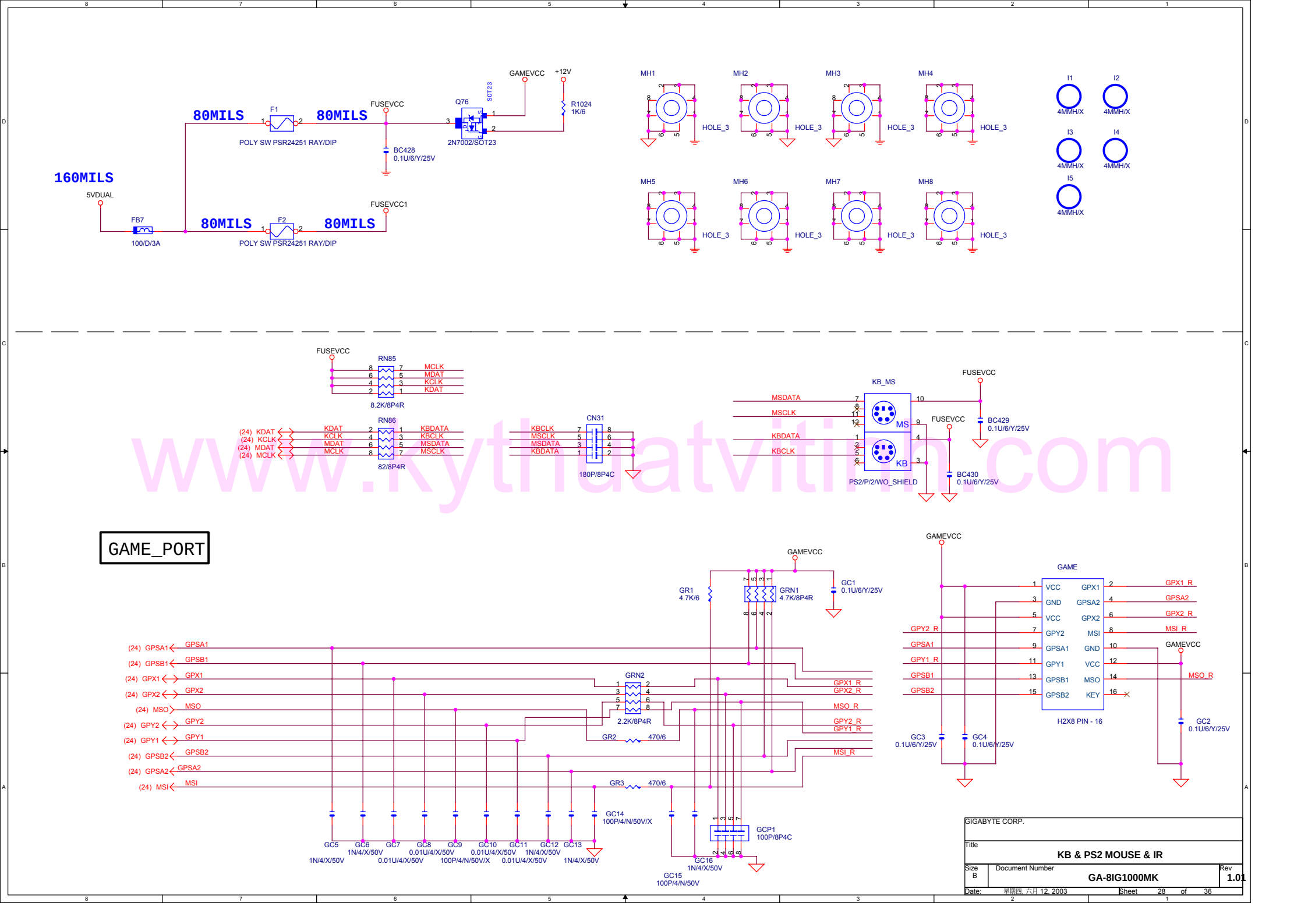

www.kythuatvitinh.com

GIGABYTE CORP.		
Title	KB & PS2 MOUSE & IR	
Size B	Document Number GA-8IG1000MK	Rev 1.01
Date: 星期四, 六月 12, 2003	Sheet 28 of 36	

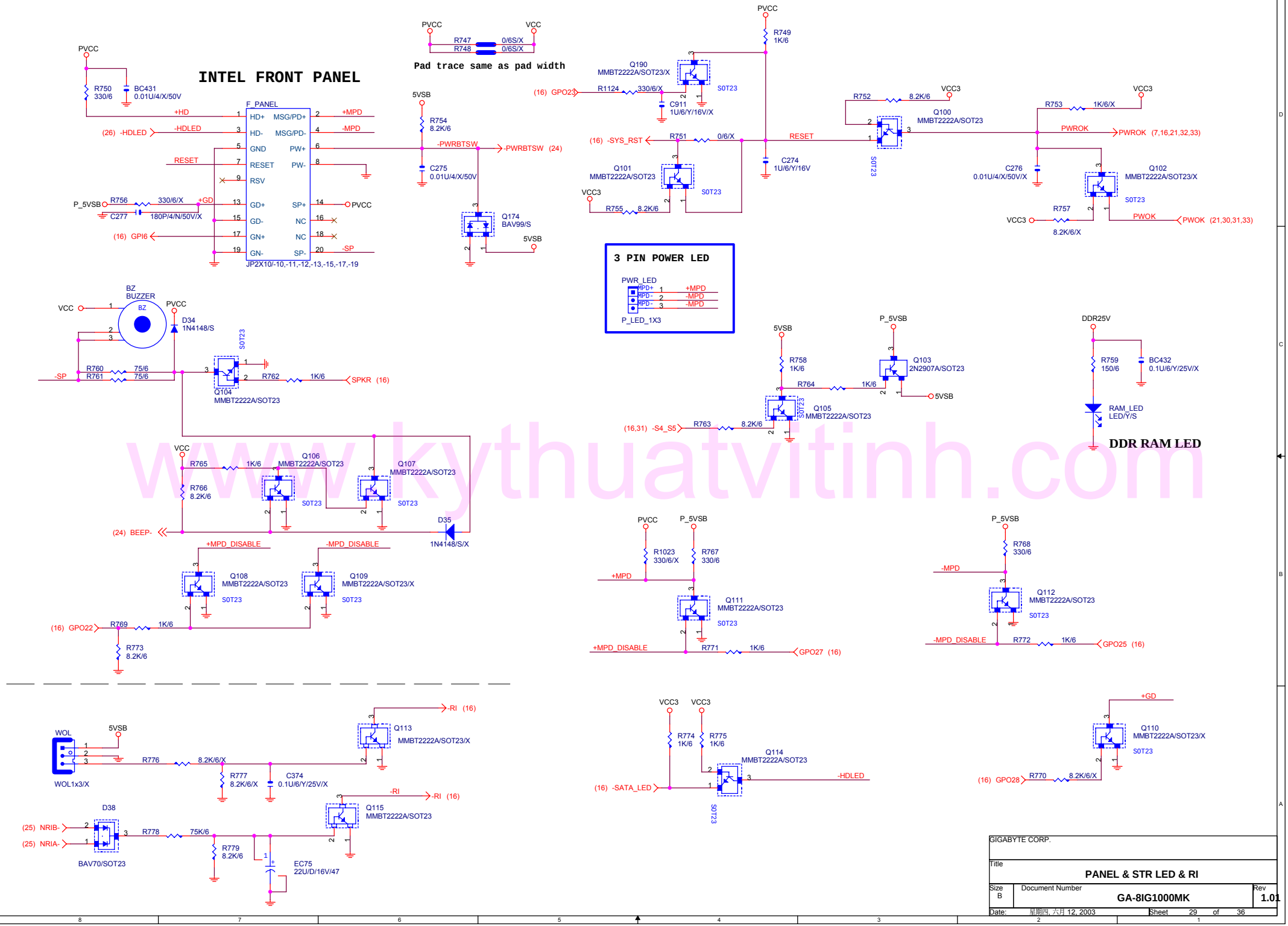

www.kythuatvitinh.com

REAR USB

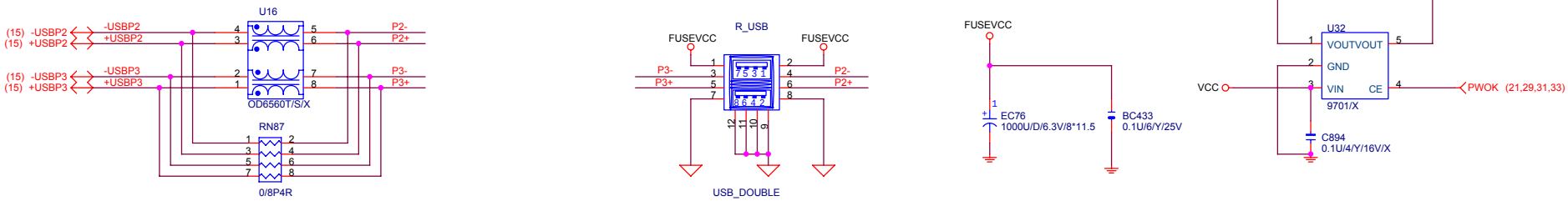

FRONT SIDE USB1

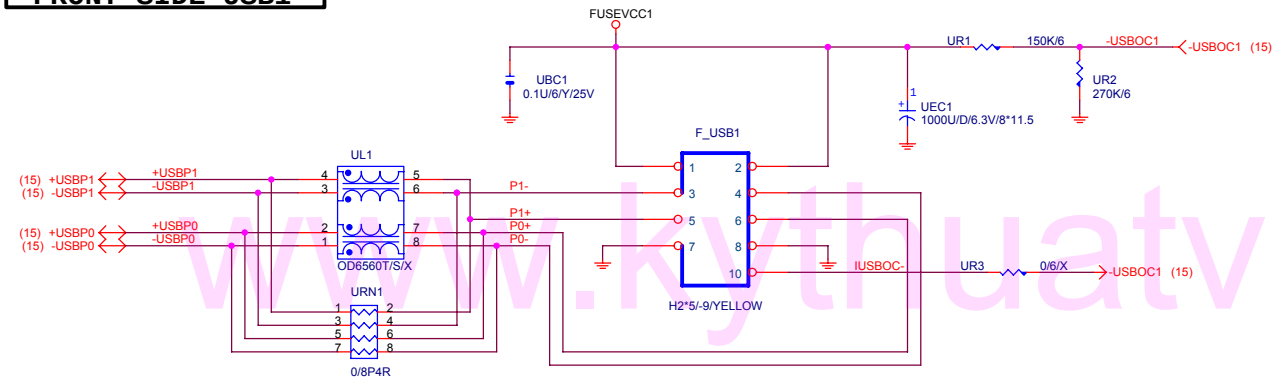

FRONT SIDE USB2

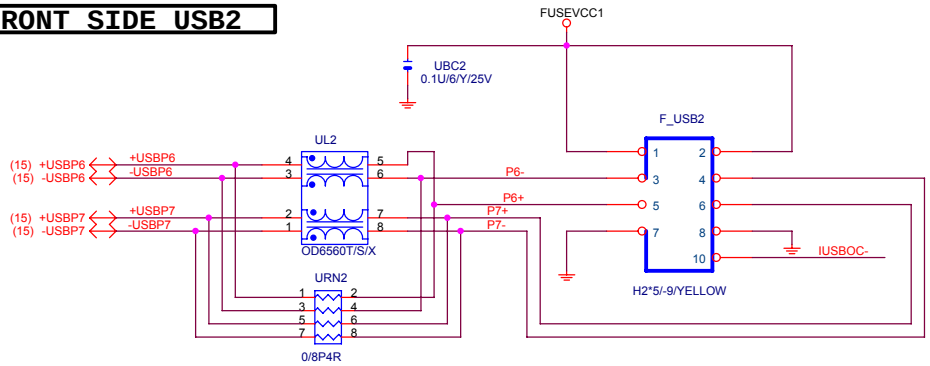

www.kythuatvitinh.com

GIGABYTE CORP.		
Title	ICH USB PORT	
Size B	Document Number GA-8IG1000MK	Rev 1.01
Date: 星期四, 六月 12, 2003	Sheet 30 of 36	

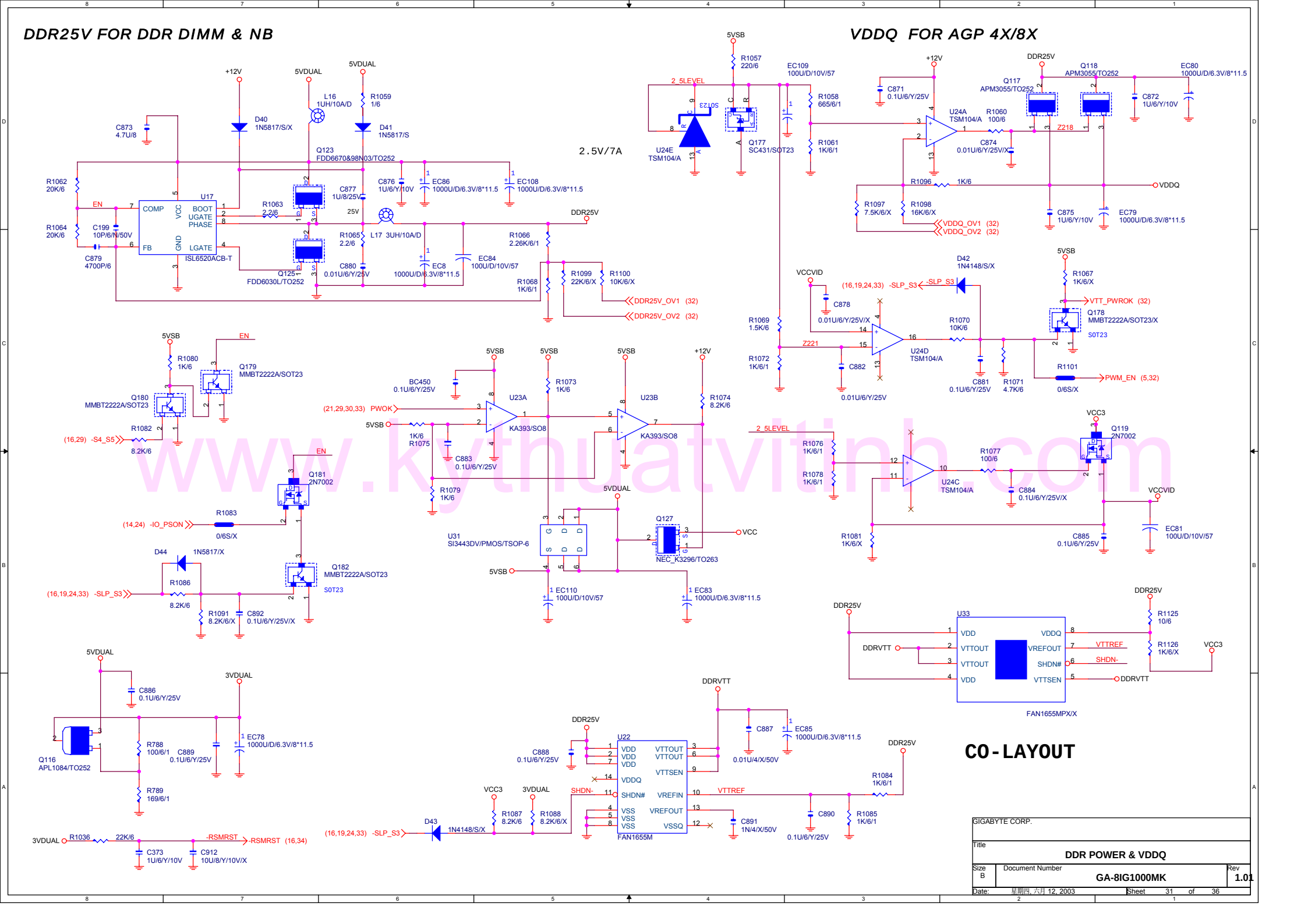

www.kythuatvitinh.com

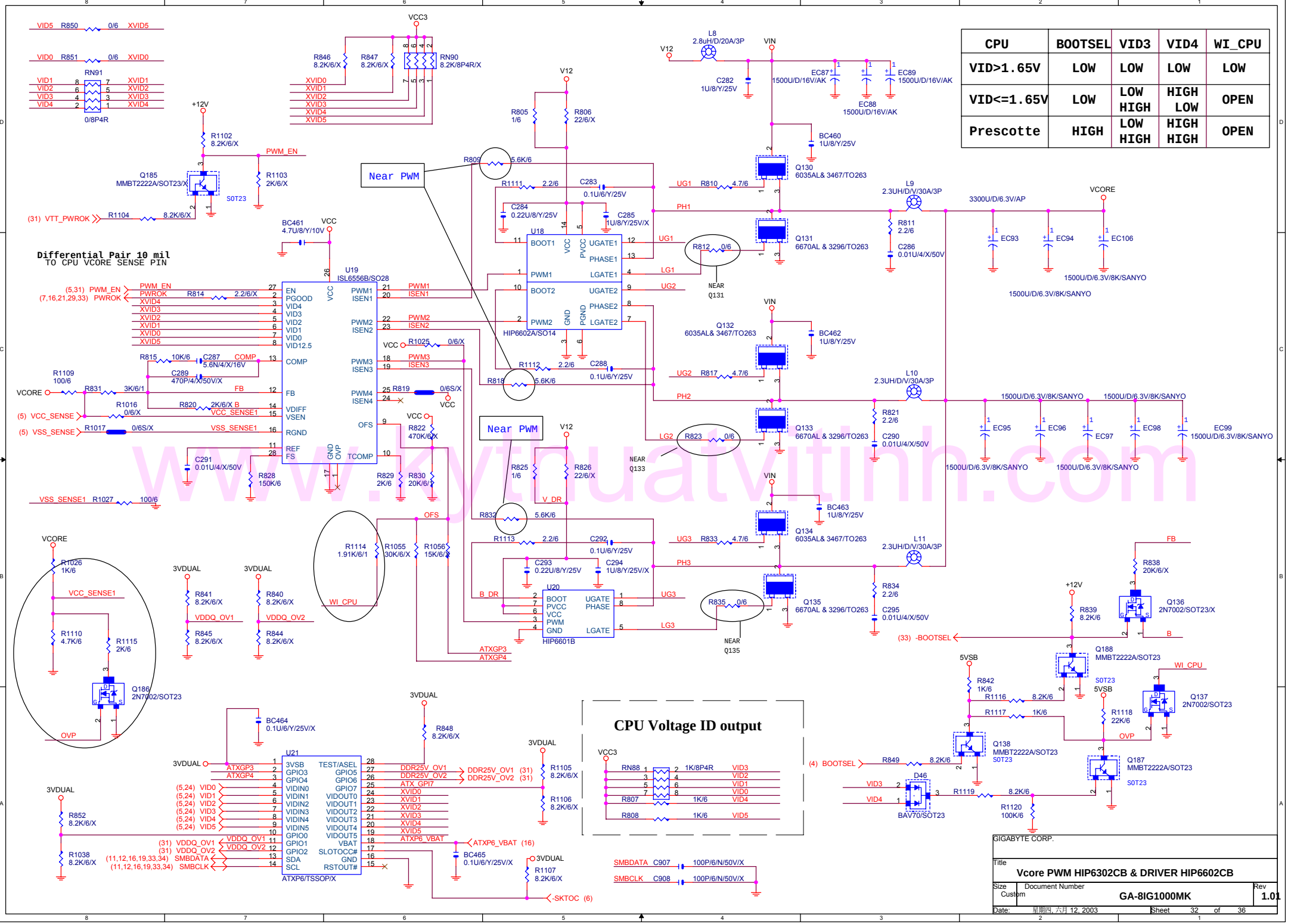

CPU	BOOTSEL	VID3	VID4	WI_CPU
VID>1.65V	LOW	LOW	LOW	LOW
VID<=1.65V	LOW	LOW HIGH	HIGH LOW	OPEN
Prescotte	HIGH	LOW HIGH	HIGH HIGH	OPEN

www.kythuatvitinh.com

ATX POWER CONNECTOR

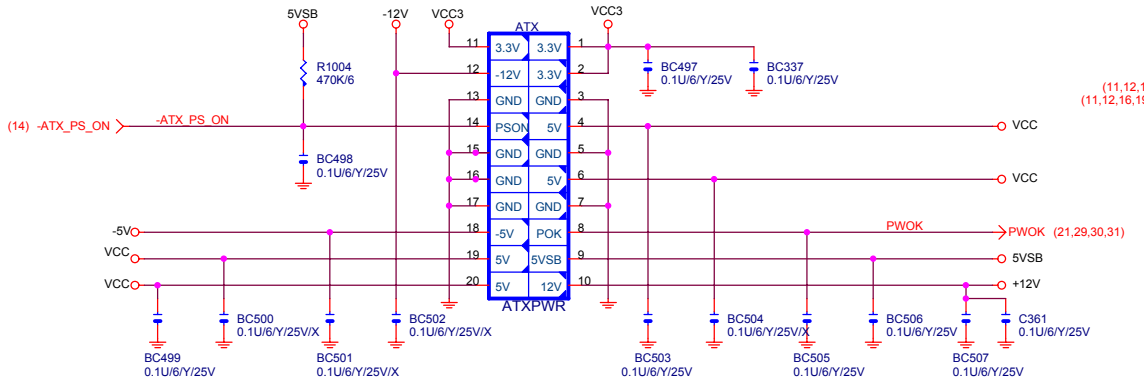

SMBUS CONN.

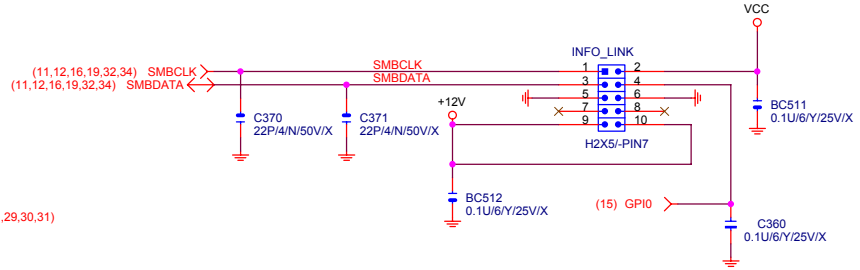

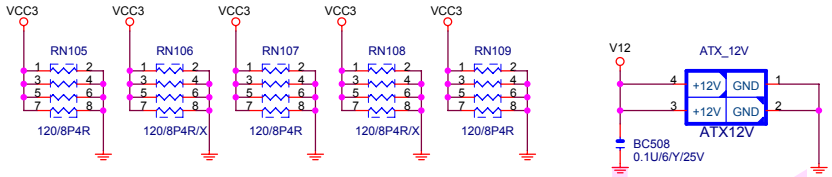

www.kythuatvitinh.com

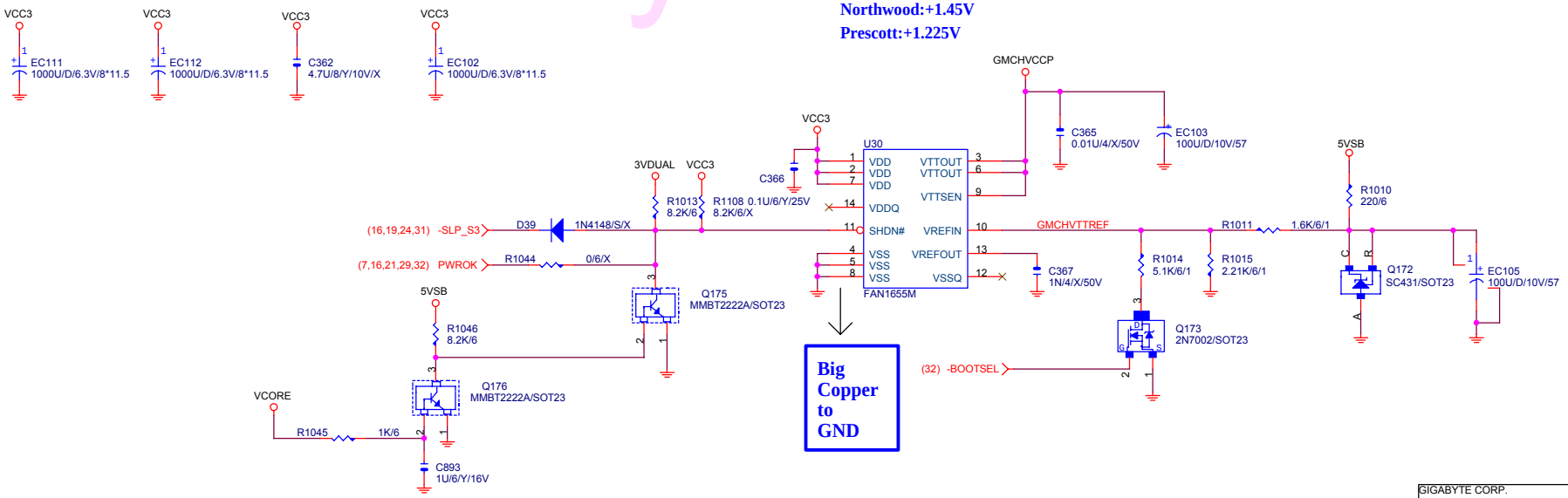

GIGABYTE CORP.	
Title	Misc. PWR & ATX CONN.
Size B	Document Number GA-8IG1000MK
Rev	1.01
Date: 星期四, 六月 12, 2003	Sheet 33 of 36

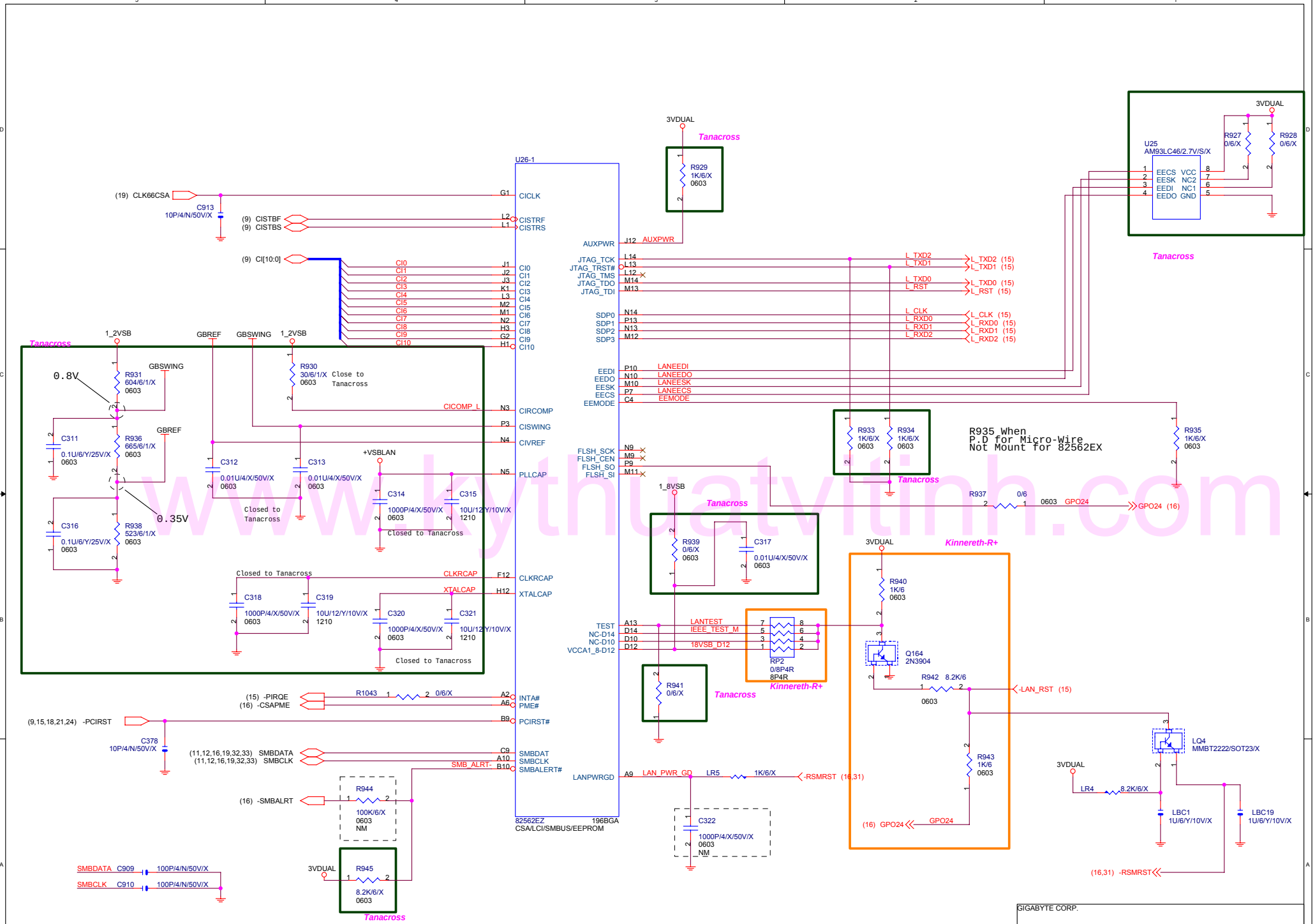

www.kythuatvitinh.com

GIGABYTE CORP.

Title: CSA TANACROSS_1

Size: Custom | Document Number: GA-8IG1000MK | Rev: 1.01

Date: 星期四, 六月 12, 2003 | Sheet 34 of 36

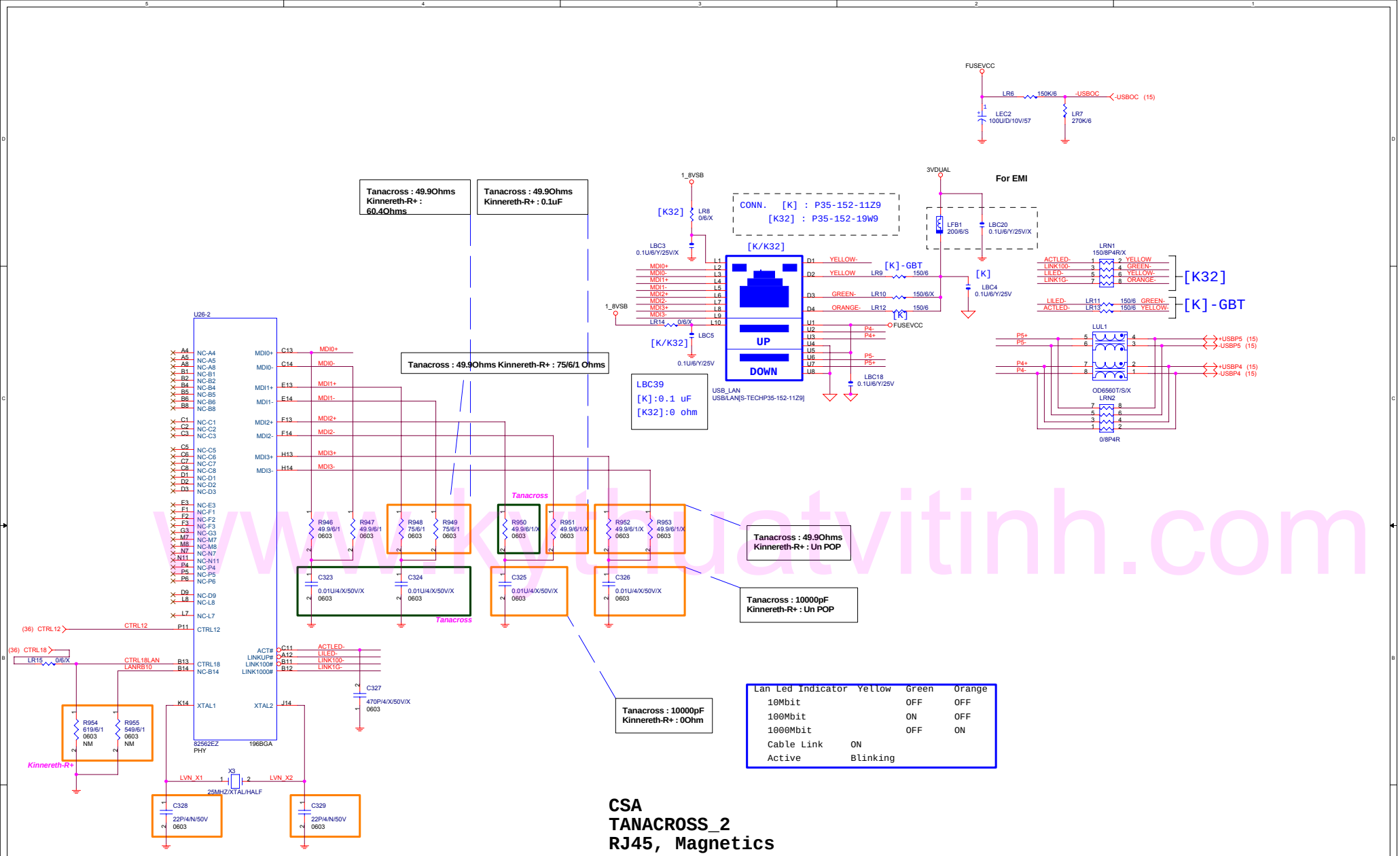

Lan Led Indicator	Yellow	Green	Orange
10Mbit		OFF	OFF
100Mbit		ON	OFF
1000Mbit		OFF	ON
Cable Link	ON		
Active	Blinking		

CSA
TANACROSS_2
RJ45, Magnetics

www.kythuatvitinh.com

GIGABYTE CORP.		
Title	CSA TANACROSS_2	
Size C	Document Number GA-8IG1000MK	Rev 1.01
Date: 星期四, 六月 12, 2003	Sheet 35 of 36	

+1.2VSB
Max800mA Typ500mA

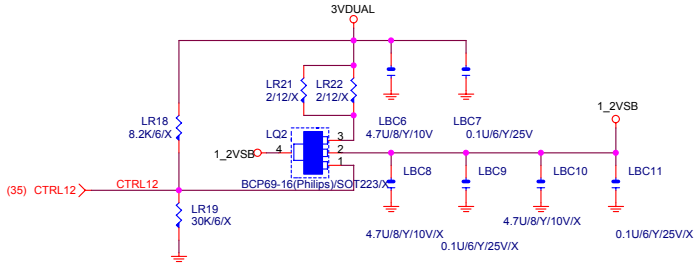

+1.8VSB
Max500mA Typ250mA

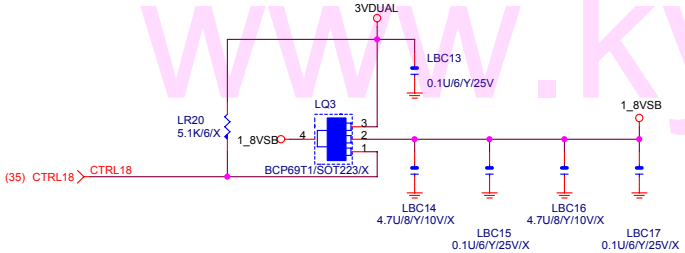

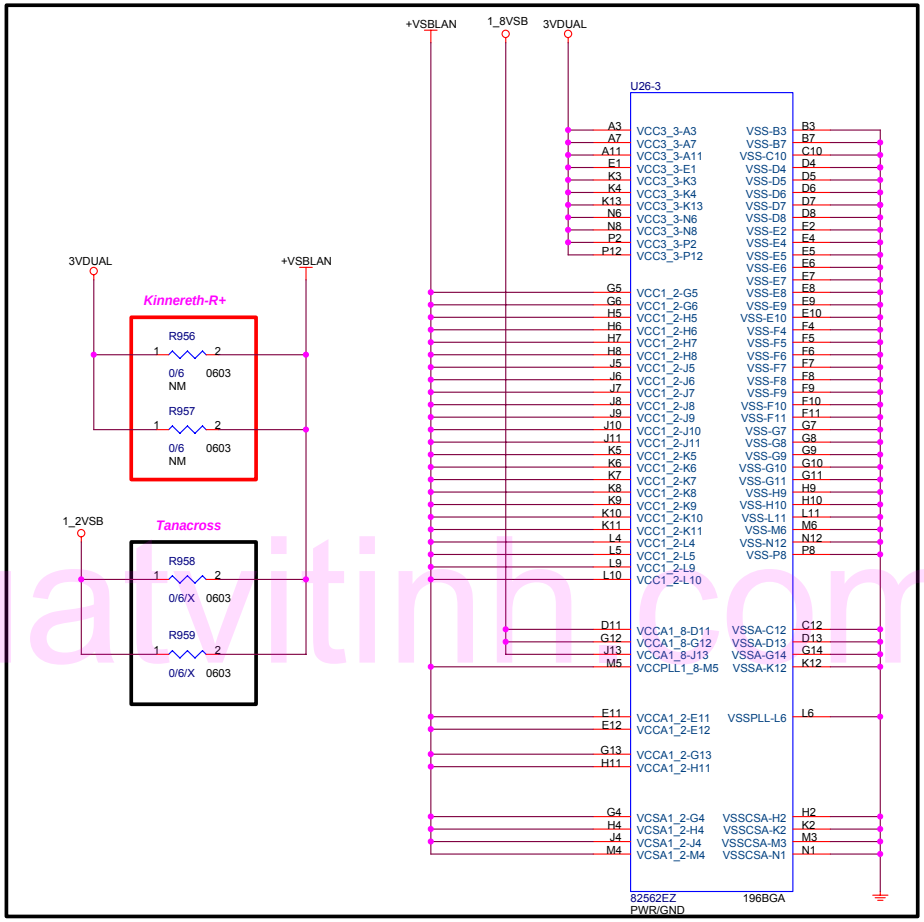

Tanacross

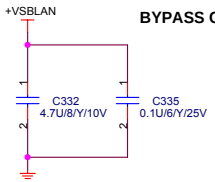

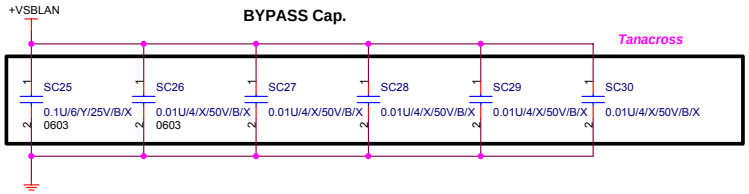

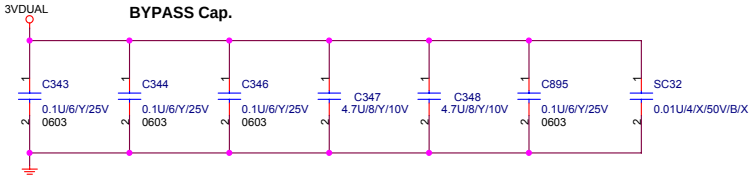

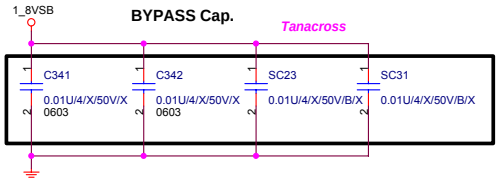

GIGABYTE CORP.		
Title	CSA TANACROSS_3	
Size Custom	Document Number GA-8IG1000MK	Rev 1.01
Date: 星期四, 六月 12, 2003	Sheet 36 of 36	

www.kythuatvitinh.com